UNOX®

Designer Book

TRANSLATION OF THE ORIGINAL INSTRUCTIONS

ENGLISH

MIND Maps™

XECC-XEVC-XEBC
XEVL-XEBL-XECL

FORWARD 3
CODES 4
TABLES 6
INSTALLATION 23

Forward

UNOX **CHEFTOP-BAKERTOP MIND.Maps**™ ovens have always stood out for their uniform cooking performance.

AN IDEA IN MIND, A SOLUTION AT HAND.
Fine cooking.

Easy to control. As natural as the idea you have in mind. As fast as the eye can see. **CHEFTOP-BAKERTOP MIND.Maps**™ by UNOX is the new range of professional ovens that allows you to create the exact recipe you have in mind, with just a simple gesture.

CHEFTOP-BAKERTOP MIND.Maps™ ONE and **CHEFTOP-BAKERTOP MIND.Maps**™ PLUS give you total cooking control and maximum creative freedom. Repeatable processes that reduce time and cost. Performance, safety and reliability combined with an extremely elegant design.

MIND.Maps™. Personality. With just one gesture.
With the patented **MIND.Maps**™ technology, temperature, humidity and ventilation follow the curves marked by the hand on a display with a visual language. You can now create your own way of cooking and control it second by second with just a few gestures.

Thanks to **AIR.Maxi**™ with **STEAM.Maxi**™, the powerful built-in steam generator, and **DRY.Maxi**™, the efficient dehumidification system, UNOX **CHEFTOP-BAKERTOP MIND.Maps**™ ensures perfect results across the tray, for all trays. The **ADAPTIVE.Cooking** technology ensures optimal control for large amounts of food.

In line with UNOX philosophy based on the "THINK SIMPLE" concept, we want to create simple and effective tools for all food service designers and consultants.

UNOX DESIGNER BOOK

This tool aims at providing a simple yet exhaustive overview of the **CHEFTOP-BAKERTOP MIND.Maps**™ ovens.
Thanks to **Maxi.Link**, you can combine dozens of solutions to create the most flexible customised solution.
A unique opportunity for our sector.
Go to *www.unox.it* to the "Info Net" section, to download the information you need.
You can also request a hardcopy or DVD of the manual.

For advice, please contact:

Designer Hotline **E**urope**A**frica**M**iddle**E**east

Tel: +39.049.8657511

Fax: +39.040.8657555

roberto.assi@unox.com

http://infonet.unox.com

When reading the manual, please always consider all national standards and regulations in force. We reserve the right to make improvements and modifications without prior notice.
Updates are available on Info Net.

Codes

Number of trays

03 cooking trays **07** cooking trays
04 cooking trays **10** cooking trays
05 cooking trays **16** cooking trays
06 cooking trays **20** cooking trays

Series

Type of tray

13 (GN 1/1 with insertion on the short side)
11 (GN 1/1 with insertion on the long side)
23 (GN 2/3)
21 (GN 2/1)
EU (600x400)

V (ChefTop)
B (BakerTop)
C (Compact)

Family

Type of heating

E (Electric)
G (Gas)
Y (Electric 380V)
D (Electric 230V)

E (Europe)

Sales code

1 (ONE)
P (PLUS)
Z (ZERO)

Product release

Door opening

R (Right)
L (Left)

Example 1	X	E	C	C	-	05	23	-	E	1	R	M	
Example 2	X	E	V	C	-	05	11	-	E	1	L	M	LP
Example 3	X	E	C	L	-	20	13	-	E	1	L	S	
Example 4	X	E	B	L	-	16	EU	-	Y	P	L	S	

LP= reduced power models

Closures

L (Lever)
S (Launch)
E (Electric lock)
M (Manual closure)

E.g. 1: **XECC - 0523 - E1RM:** Electric compact MIND Maps™ oven with 5 GN 2/3 trays, right-hand opening and manual closure
E.g. 2: **XEVC - 0511 - E1LM:** Electric CHEFTOP MIND Maps™ oven with 5 GN 1/1 trays, left-hand opening and manual closure
Es. 3: **XECL - 2013 - E1LS:** Electric CHEFTOP MIND Maps™ BIG COMPACT oven 20 trays GN 1/1 (con inserimento lato corto) left-hand opening and manual, launch closure
E.g. 4: **XEBL - 16EU - YPLS:** Electric BAKERTOP BIG MIND Maps™ oven with 16 trays 600x400, left-hand opening and launch closure

Note for the tables below
In the oven model code, the “x” is a generic placeholder for the letter indicating the door opening direction: left (L) or right (R).

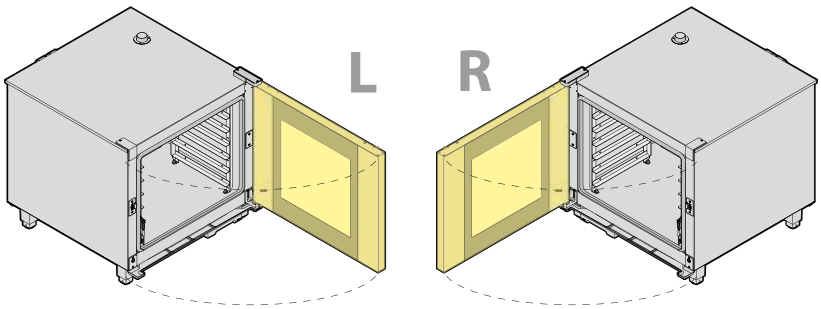

For example the code XECC-0523-E1xM may indicate:
XECC-0523-E1LM: oven with left-hand opening
XECC-0523-E1RM: oven with right-hand opening

Characteristics	Version		
	ONE	**PLUS**	**ZERO**
Display	Display: LCD 7” Firmware: ONE STANDARD Menu: SET - PROGRAMS Technologies: **MIND.Maps™** - **AIR.Maxi™** - **STEAM.Maxi™** - **DRY.Maxi™**	Display: LCD 9.5” Firmware: PLUS Menu: SET - PROGRAM MULTITIME - MISE EN PLACE CHEFUNOX ADAPTIVE CLIMA Technologies: **MIND.Maps™** - **AIR.Maxi™** - **STEAM.Maxi™** - **DRY.Maxi™**	Seven-segment LED display Firmware: ZERO Menu: SET - PROGRAM Technologies: AIR.Plus™ - STEAM.Plus™ - DRY.Plus™
Wash system retrofitting	NO	YES	NO
Maximum temperature	260°C	260°C 300°C (BIG models)	260°C
Triple glazed glass door	NO	YES	NO
Double glazed glass door	YES	NO	YES
Core probe	“Single Point” for **CHEFTOP MIND.Maps™** and **BAKERTOP MIND.Maps™**	“Multipoint” 100 mm for **BAKERTOP MIND.Maps™** “Multipoint” 130 mm for **CHEFTOP MIND.Maps™**	N/A
Fan speed	4	4	2
Resistor modulation	0-100%	33/66/100%	0-100%

Tables

TAB. 1. ▶ GENERAL INFORMATION FOR OVENS 6
TAB. 2. ▶ TECHNICAL DATA FOR OVENS 8
TAB. 3. ▶ OTHER TECHNICAL DATA FOR OVENS 17
TAB. 4. ▶ OVENS GAS CONSUMPTION AND MAXIMUM NOMINAL THERMAL LOAD 18
TAB. 6. ▶ TECHNICAL DATA FOR HOODS WITH VAPOUR CONDENSER 19
TAB. 5. ▶ CONNECTIONS FOR GAS OVENS 19
TAB. 7. ▶ SLOWTOP AND PROVERS TECHNICAL DATA 20
TAB. 8. ▶ TECHNICAL DATA OF THE DECKTOP 20
TAB. 9. ▶ PROVERS FOR OVENS 21
TAB. 10. ▶ KEEP WARM FOR OVENS 21
TAB. 11. ▶ HOODS FOR OVENS 22
TAB. 12. ▶ PALLET WIDTH 24
TAB. 13. ▶ PACKAGING SIZE FOR BAKERTOP MIND.MAPSTM OVENS 24
TAB. 14. ▶ PACKAGING SIZE FOR CHEFTOP MIND.MAPSTM OVENS 25
TAB. 16. ▶ TECHNICAL DATA - UNOX.PURE-RO 40
TAB. 15. ▶ TECHNICAL DATA - UNOX.PURE XHC004 37
TAB. 18. ▶ STACKING KIT 51
TAB. 19. ▶ UNOX LINK 52
TAB. 17. ▶ SPECIFIC WASH PROGRAMS 49
TAB. 20. ▶ STAND TECHNICAL DATA 54
TAB. 21. ▶ CABINET TECHNICAL DATA 54

TAB. 1. ▶ GENERAL INFORMATION FOR **OVENS**

BAKERTOP MIND. Maps™ PATISSERIE		Cooking trays					Oven model		Installation
		Type	Size [mm] WxDxH	N.	Tray pitch [mm]	Max. load [kg]			
XEBC	Electric	600 x 400	860x967x675	4	80	20	ONE	XEBC-**04**EU-E1xM	Countertop
			860x967x843	6	80	30	ONE	XEBC-**06**EU-E1xM	Countertop
			535x872x1163	10	80	50	ONE	XEBC-**10**EU-E1xM	Countertop
			860x967x675	4	80	20	PLUS	XEBC-**04**EU-EPxM	Countertop
			860x967x843	6	80	30	PLUS	XEBC-**06**EU-EPxM	Countertop
			860x967x1163	10	80	50	PLUS	XEBC-**10**EU-EPxM	Countertop
	Gas		860x967x843	6	80	30	PLUS	XEBC-**06**EU-GPxM	Countertop
			860x967x1163	10	80	50	PLUS	XEBC-**10**EU-GPxM	Countertop
BIG XEBL	Electric	600 x 400	892x925x1875	16	80	85	ONE	XEBL-**16**EU-E1xS	Free-standing
			892x925x1875	16	80	85	PLUS	XEBL-**16**EU-YPxS	Free-standing
			892x925x1875	16	80	85	PLUS	XEBL-**16**EU-DPxS	Free-standing
	Gas		892x925x1875	16	80	85	PLUS	XEBL-**16**EU-GPxS	Free-standing

CHEFTOP MIND. Maps™ CUISINE		Cooking trays					Oven model		Installation
		Type	Size [mm] WxDxH	N.	Tray pitch [mm]	Max. load [kg]			
COMPACT XECC	Electric	GN2/3	535x672x649	5	67	17	ONE	XECC-**05**23-E1xM	Countertop
				5	67	17	PLUS	XECC-**05**23-EPxM	Countertop
		GN1/3	535 x 872 x 649	5	67	25	PLUS	XECC-**05**13-EPxM	Countertop
			535 x 872 x 984	10	67	45	PLUS	XECC-**10**13-EPxM	Countertop
XEVC	Electric	GN1/1	750x783x538	3	67	15	ONE	XEVC-**03**11-E1xM	Countertop
			750x783x675	5	67	25	ONE	XEVC-**05**11-E1xM	Countertop
			750x783x675	5	67	25	ONE	XEVC-**05**11-E1xM-LP	Countertop
			750x783x843	7	67	35	ONE	XEVC-**07**11-E1xM	Countertop
			750x783x1010	10	67	45	ONE	XEVC-**10**11-E1xM	Countertop
			750x783x538	3	67	15	PLUS	XEVC-**03**11-EPXM	Countertop
			750x783x675	5	67	25	PLUS	XEVC-**05**11-EPxM	Countertop
			750x783x843	7	67	35	PLUS	XEVC-**07**11-EPxM	Countertop
			750x783x1010	10	67	45	PLUS	XEVC-**10**11-EPxM	Countertop
			750x783x675	5	67	25	ZERO	XEVC-**05**11-EZxM	Countertop
			750x783x675	5	67	25	ZERO	XEVC-**05**11-EZxM-LP	Countertop
			750x783x843	7	67	35	ZERO	XEVC-**07**11-EZxM	Countertop
			750x783x1010	10	67	45	ZERO	XEVC-**10**11-EZxM	Countertop
		GN2/1	860x1145x842	6	67	60	PLUS	XEVC-**06**21-EPxM	Countertop
			860x1145x1162	10	67	60	PLUS	XEVC-**10**21-EPxM	Countertop
	Gas	GN1/1	750x783x675	5	67	25	PLUS	XEVC-**05**11-GPxM	Countertop
			750x783x843	7	67	35	PLUS	XEVC-**07**11-GPxM	Countertop
			750x783x1010	10	67	45	PLUS	XEVC-**10**11-GPxM	Countertop
		GN2/1	750x783x842	6	67	60	PLUS	XEVC-**06**21-GPxM	Countertop
			750x783x1162	10	67	60	PLUS	XEVC-**10**21-GPxM	Countertop
BIG XEVL	Electric	GN1/1	892x925x1875	20	67	90	ONE	XEVL-**20**11-E1xS	Free-standing
			892x925x1875	20	67	90	PLUS	XEVL-**20**11-YPxS	Da pavimento
			892x925x1875	20	67	90	PLUS	XEVL-**20**11-DPxS	Free-standing
		GN2/1	892x1164x1875	20	67	180	PLUS	XEVL-**20**21-YPxS	Free-standing
			892x1164x1875	20	67	180	PLUS	XEVL-**20**21-DPxS	Free-standing
	Gas	GN1/1	892x925x1875	20	67	90	PLUS	XEVL-**20**11-GPxS	Free-standing
		GN2/1	892x1164x1875	20	67	180	PLUS	XEVL-**20**21-GPxS	Free-standing
BIG XECL COMPACT	Electric	GN 1/3	650x1002x1875	20	67	90	ONE	XECL-**20**13-E1xS	Free-standing
			650x1002x1875	20	67	90	PLUS	XECL-**20**13-YPxS	Free-standing

TAB. 2. ▶ TECHNICAL DATA FOR **OVENS**

CHEFTOP MIND.Maps™ CUISINE ELECTRIC XEVC	Cooking trays		SIZE	GN 1/1						
			N.	3		5				
				ONE	PLUS	ONE	ONE	ZERO	ZERO	PLUS
	Oven code: XEVC			0311-E1xM	0311-EPxM	0511-E1xM	0511-E1xM LP	0511-EZxM	0511-EZxM LP	0511-EPxM
Power	for air heating [1]		kW	4,85	4,85	6,9	6,75	9	6,75	9
	for steam generation [1]		kW	4,85	4,85	6,9	6,75	9	6,75	9
Size	Width		mm	750	750	750	750	750	750	750
	Depth		mm	783	783	783	783	783	783	783
	Height		mm	538	538	675	675	675	675	675
Weight	Gross		kg	65	65	85	85	85	85	85
	net		kg	50	50	70	70	70	70	70
Thermal load	sensible		kW	0,7	0,7	0,9	0,85	0,9	0,85	0,9
	latent	with hood [2]	kW	0	0	0	0	0	0	0
		without hood	kW	2,2	2,2	3,6	3,6	3,6	3,6	3,6
Max food load			kg	15	15	25	25	25	25	25
IPX_ [3]				IPX4	IPX4	IPX4	IPX4	IPX4	IPX4	IPX4
220 - 240 V/1PH+N 50 Hz	Absorbed power		kW	5,0	5,0	○	7.0	○	7.0	○
	Absorbed current		A	21,5	21,5		30.4		30.4	
	Power cable H07RN-F	Cross-section	mm²	4	4		4		4	
		Length	m	1,5	1,5		1,5		1,5	
		Schuko plug		●	●		●		●	
	Fuses [4] (number of fuses = 2)		A	32	32		32		32	
220-240V/3PH 50Hz	Absorbed power		kW	5,0	5,0	9,3	7.0	9.3	7.0	9,3
	Absorbed current		A	12,9	12,9	24	18	24	18	24
	Power cable H07RN-F	Cross-section	mm²	2,5	2,5	4	4	4	4	4
		Length	m	1,5	1,5	1,5	1.5	1.5	1,5	1,5
	Fuses [4] (number of fuses = 3)		A	16	16	32	25	32	25	32
380-415V/3PH+N 50Hz	Absorbed power		kW	5,0	5,0	9.3	7.0	9.3	7.0	9,3
	Absorbed current		A	7,4	7,4	14	11	14	11	14
	Power cable H07RN-F	Cross-section	mm²	2,5	2,5	2,5	2.5	2.5	2.5	2,5
		Length	m	1,5	1,5	1,5	1,5	1,5	1,5	1,5
	Fuses [4] (number of fuses = 3)		A	16	16	16	16	16	16	16
Average consumption [5] **Water**	for steam generation		l/h	3,4	3,4	4,9	4,9	4,9	4,9	6,5
Average consumption [5] **Power**	for steam generation		kW	3,4	3,4	4,8	4,8	4,8	4,8	6,4

(1) This refers to versions with 230 V and 400 V. For the 415 V versions, the value must be multiplied by 1.0
(2): UNOX hood is provided with a steam condenser
(3) Protection rating against the harmful penetration of water pursuant to international regulation IEC 60529
(4) Not supplied by UNOX
(5) Referred to a simultaneity coefficient of 0.7 (M. Rohatsch, F. Lemme and F. Wagner, Professional Kitchens, Ed. FCSI 2007)
○ Not available
● Not supplied

CHEFTOP MIND.Maps™ CUISINE ELECTRIC XEVC	Cooking trays		SIZE	GN 1/1						GN 2/1	
			N.	7			10			6	10
				ONE	ZERO	PLUS	ONE	ZERO	PLUS	PLUS	PLUS
	Oven code: XEVC			0711-E1xM	0711-EZxM	0711-EPxM	1011-E1xM	1011-EZxM	1011-EPxM	0621-EPxM	1021-EPXM
Power	for air heating [1]		kW	11.2	11.2	11,2	18	18	18	20.3	30.45
	for steam generation [1]		kW	11.5	11.5	11,5	18	18	18	20.3	30.45
Size	Width		mm	750	750	750	750	750	750	860	860
	Depth		mm	783	783	783	783	783	783	1130	1130
	Height		mm	843	843	843	1010	1010	1010	843	1163
Weight	Gross		kg	100	100	100	110	110	110	175	185
	net		kg	85	85	85	95	95	95	160	170
Thermal load	sensible		kW	1,0	1,0	1,0	1,2	1.2	1.2	1.5	1.5
	latent	with hood [2]	kW	0		0	0	0	0	0	0
		without hood	kW	5,1	5.1	5,1	7,3	7.3	7.3	8.7	14.5
Max food load			kg	35	35	35	45	45	45	60	90
IPX_ [3]				IPX4	IPX4	IPX4	IPX4	IPX4	IPX4	IPX4	IPX5
220 - 240 V/1PH+N 50 Hz	Absorbed power		kW	○	○	○	○	○	○	○	○
	Absorbed current		A								
	Power cable H07RN-F	Cross-section	mm²								
		Length	m								
		Schuko plug									
	Fuses [4] (number of fuses = 2)		A								
220-240V/3PH 50Hz	Absorbed power		kW	11.7	11.7	11.7	○	○	○	20,5	31
	Absorbed current		A	30	30	30				52	80
	Power cable H07RN-F	Cross-section	mm²	6	6	6				16	25
		Length	m	1.5	1.5	1.5				●	●
	Fuses [4] (number of fuses = 3)		A	40	40	40				63	100
380-415V/3PH+N 50Hz	Absorbed power		kW	11.7	11,7	11,7	18.5	18.5	18,5	20,5	31
	Absorbed current		A	18	18	18	26	26	26	31	48,5
	Power cable H07RN-F	Cross-section	mm²	2.5	2,5	2,5	4	4	4	6	10
		Length	m	1.5	1,5	1,5	1.5	1.5	1,5	●	●
	Fuses [4] (number of fuses = 3)		A	25	25	25	32	32	32	40	50
Average consumption [5] **Water**	for steam generation		l/h	8.1	8,1	8,1	13.0	13.0	13,0	14,4	21,6
Average consumption [5] **Power**	for steam generation		kW	8.1	8,1	8,1	12.8	12.8	12,8	14,2	21,3

(1) This refers to versions with 230 V and 400 V. For the 415 V versions, the value must be multiplied by 1.0
(2): UNOX hood is provided with a steam condenser
(3) Protection rating against the harmful penetration of water pursuant to international regulation IEC 60529
(4) Not supplied by UNOX
(5) Referred to a simultaneity coefficient of 0.7 (M. Rohatsch, F. Lemme and F. Wagner, Professional Kitchens, Ed. FCSI 2007)
○ Not available
● Not supplied

CHEFTOP MIND.Maps™ CUISINE ELECTRIC COMPACT XECC	Cooking trays		SIZE	GN 2/3		GN 1/3	
			N.	5		5	10
	Oven code: XECC			ONE	PLUS	PLUS	PLUS
				0523-E1xM	0523-EPxM	0513-EPxM	1013-EPxM
Power	for air heating [1]		kW	4,9	4,9	9	18
	for steam generation (1)		kW	4,9	4,9	9	18
Size	Width		mm	535	535	535	535
	Depth		mm	672	672	872	872
	Height		mm	649	649	649	984
Weight	Gross		kg	69	69	80	100
	net		kg	55	58	65	94
Thermal load	sensible		kW	0,7	0,7	0,9	1,2
	latent	with hood [2]	kW	0	0	0	0
		without hood	kW	2,2	2,2	3,6	7,3
Max food load			kg	17	17	25	50
IPX_ [3]				IPX4	IPX4	IPX4	IPX4
220 - 240 V/1PH+N 50 Hz	Absorbed power		kW	5,15	5,15	○	○
	Absorbed current		A	22,4	22,4		
	Power cable H07RN-F	Cross-section	mm²	4	4		
		Length	m	1,5	1,5		
		Schuko plug		●	●		
	Fuses [4] (number of fuses = 2)		A	25	25		
220-240V/3PH 50Hz	Absorbed power		kW	5,2	5,15	9,3	○
	Absorbed current		A	19	19,5	23,6	
	Power cable H07RN-F	Cross-section	mm²	2,5	2,5	2,5	
		Length	m	1,5	1,5	1,5	
	Fuses [4] (number of fuses = 3)		A	25	25	32	
380-415V/3PH+N 50Hz	Absorbed power		kW	5.2	5.15	9,3	18,5
	Absorbed current		A	13	12.6	14	28,5
	Power cable H07RN-F	Cross-section	mm²	2.5	2.5	2,5	4
		Length	m	1.5	1.5	1,5	1,5
	Fuses [4] (number of fuses = 3)		A	20	16	20	32
Average consumption [5] **Water**	for steam generation		l/h	2,2	2,2	4,9	13,1
Power	for steam generation		kW	2,1	2,1	4,8	12,9

(1) This refers to versions with 230 V and 400 V. For the 415 V versions, the value must be multiplied by 1.0
(2): UNOX hood is provided with a steam condenser
(3) Protection rating against the harmful penetration of water pursuant to international regulation IEC 60529
(4) Not supplied by UNOX
(5) Referred to a simultaneity coefficient of 0.7 (M. Rohatsch, F. Lemme and F. Wagner, Professional Kitchens, Ed. FCSI 2007)
○ Not available
● Not supplied

CHEFTOP MIND.Maps™ CUISINE ELECTRIC BIG XEVL	Cooking trays		SIZE	GN 1/1			GN 2/1	
			N.	20			20	
	Oven code: XEVL			ONE	PLUS		PLUS	PLUS
				2011-E1xS	2011-YPxS	2011-DPxS	2021-YPxS	2021-DPxS
Power	for air heating [1]			33,8	36	36	62,5	62,5
	for steam generation [1]			33,8	36	36	62,5	62,5
Size	Width		mm	892	892	892	892	892
	Depth		mm	925	925	925	1164	1164
	Height		mm	1875	1875	1875	1875	1875
Weight	Gross		kg	290	300	300	363	363
	net		kg	262	279	279	339	339
Thermal load	sensible		kW	2,3	2,3	2,3	2,7	2,7
	latent	with hood [2]	kW	○	○	○	○	○
		without hood	kW	21,3	21,3	21,3	29,1	29,1
Max food load			kg	90	90	90	180	180
IPX_ [3]				IPX5	IPX5	IPX5	IPX5	IPX5
220-240V/ 3PH 50 Hz	Absorbed power		kW	35,5	○	38,5	○	65
	Absorbed current		A	91,5		100		167
	Power cable H07RN-F	Cross-section	mm²	4G25		4G35		3x1x70+35PE
		Length	m	●		●		●
	magnetothermal switch		A	100		125		200
380-415V/ 3PH+N 50 Hz	Absorbed power		kW	35,5	38,5	○	65	○
	Absorbed current		A	57	58		102	
	Power cable H07RN-F	Cross-section	mm²	5G16	5G16		5G35	
		Length	m	●			○	
	magnetothermal switch		A	63	63		125	
Average consumption [5] **Water**	for steam generation		l/h	20,7	26,5	26,5	44,3	44,3
Average consumption [5] **Power**	for steam generation		kW	20,4	26,2	26,2	44,8	44,8

(1) This refers to versions with 230 V and 400 V. For the 415 V versions, the value must be multiplied by 1.0
(2): UNOX hood is provided with a steam condenser
(3) Protection rating against the harmful penetration of water pursuant to international regulation IEC 60529
(4) Not supplied by UNOX
(5) Referred to a simultaneity coefficient of 0.7 (M. Rohatsch, F. Lemme and F. Wagner, Professional Kitchens, Ed. FCSI 2007)
○ Not available
● Not supplied

CHEFTOP MIND.Maps™ CUISINE ELECTRIC BIG XECL COMPACT	Cooking trays		SIZE	GN 1/1	
			N.	20	
	Oven code: XECL			ONE	PLUS
				2013-E1xS	2013-YPxS
Power	for air heating [1]			33,8	36
	for steam generation [1]			33,8	36
Size	Width		mm	650	650
	Depth		mm	1002	1002
	Height		mm	1875	1875
Weight	Gross		kg	295	300
	net		kg	285	296
Thermal load	sensible		kW	2	2
	latent	with hood [2]	kW	○	○
		without hood	kW	17,7	17,7
Max food load			kg	90	90
IPX_ [3]				IPX5	IPX5
220-240V/3PH 50 Hz	Absorbed power		kW	35,5	○
	Absorbed current		A	91,5	
	Power cable H07RN-F	Cross-section	mm²	4G25	
		Length	m	○	
	magnetothermal switch		A	100	
380-415V/3PH+N 50 Hz	Absorbed power		kW	35,5	38,5
	Absorbed current		A	57	58
	Power cable H07RN-F	Cross-section	mm²	5G16	5G16
		Length	m	○	○
	magnetothermal switch		A	63	63
Average consumption [5] **Water**	for steam generation		l/h	20,7	26,5
Average consumption [5] **Power**	for steam generation		kW	20,4	26,2

(1) This refers to versions with 230 V and 400 V. For the 415 V versions, the value must be multiplied by 1.0
(2): UNOX hood is provided with a steam condenser
(3) Protection rating against the harmful penetration of water pursuant to international regulation IEC 60529
(4) Not supplied by UNOX
(5) Referred to a simultaneity coefficient of 0.7 (M. Rohatsch, F. Lemme and F. Wagner, Professional Kitchens, Ed. FCSI 2007)
○ Not available
● Not supplied

CHEFTOP MIND.Maps™ CUISINE GAS XEVC	Cooking trays		SIZE	GN 1/1			GN 2/1	
			N.	5	7	10	6	10
				PLUS	PLUS	PLUS	PLUS	PLUS
	Oven code: XEVC			0511-GPxM	0711-GPxM	1011-GPxM	0621-GPxM	1021-GPxM
Power	for air heating [1]		kW	15	19	22	27	42,5
	for steam generation [1]		kW	15	19	22	27	42,5
Size	Width		mm	750	750	750	860	860
	Depth		mm	773	733	733	1120	1120
	Height		mm	675	843	1010	843	1163
Weight	Gross		kg	100	115	125	197	207
	net		kg	85	100	110	180	190
Thermal load	sensible		kW	0,9	1,0	1,2	1,5	1,9
	latent	with hood [2]	kW	0	0	0	0	0
		without hood	kW	3,6	5,1	7,3	8,7	14,5
Max food load			kg	25	35	45	60	90
IPX_ [3]				IPX4	IPX4	IPX4	IPX4	IPX5
220 - 240 V/1PH+N 50 Hz	Absorbed power		kW	0,6	1	1	1	1,4
	Absorbed current		A	2,2	3,5	3,5	3,5	4,3
	Power cable H07RN-F	Cross-section	mm²	1,5	1,5	1,5	1,5	1,5
		Length	m	2	2	2	2	2
		Schuko plug		√	√	√	√	√
	Fuses [4] (number of fuses = 2)		A	16	16	16	16	16
220-240V/3PH 50Hz	Absorbed power		kW	○	○	○	○	○
	Absorbed current		A					
	Power cable H07RN-F	Cross-section	mm²					
		Length	m					
	Fuses [4] (number of fuses = 3)		A					
380-415V/3PH+N 50Hz	Absorbed power		kW	○	○	○	○	○
	Absorbed current		A					
	Power cable H07RN-F	Cross-section	mm²					
		Length	m					
	Fuses [4] (number of fuses = 3)		A					
Average consumption [5] **Water**	for steam generation		l/h	10,7	13,7	15,6	17,0	24,8
Power	for steam generation		kW	10,6	13,5	15,4	16,8	24,5

(1) This refers to versions with 230 V and 400 V. For the 415 V versions, the value must be multiplied by 1.0
(2): UNOX hood is provided with a steam condenser
(3) Protection rating against the harmful penetration of water pursuant to international regulation IEC 60529
(4) Not supplied by UNOX
(5) Referred to a simultaneity coefficient of 0.7 (M. Rohatsch, F. Lemme and F. Wagner, Professional Kitchens, Ed. FCSI 2007)
○ Not available
● Not supplied

CHEFTOP MIND.Maps™ CUISINE GAS BIG XEVL	Cooking trays		SIZE	GN 1/1	GN 2/1
			N.	20	20
	Oven code: XEVL			PLUS	PLUS
				2011-GPxS	2021-GPxS
Power	for air heating [1]			48	90
	for steam generation [1]			48	90
Size	Width		mm	892	892
	Depth		mm	925	1164
	Height		mm	1875	1875
Weight	Gross		kg	302	380
	net		kg	316	356
Thermal load	sensible		kW	2,3	2,5
	latent	with hood [2]	kW	20,1	-
		without hood	kW	21,3	25,5
Max food load			kg	90	180
IPX_ [3]				IPX5	IPX5
220-240V/ 3PH /50Hz	Absorbed power		kW	2.5	2.6
	Absorbed current		A	12	12,5
	Power cable H07RN-F	Cross-section	mm²	3G1,5	3G1,5
		Length	m	1	1
	magnetothermal switch		A	16	16
380-415V/ 3PH+N /50Hz	Absorbed power		kW	○	○
	Absorbed current		A		
	Power cable H07RN-F	Cross-section	mm²		
		Length	m		
	magnetothermal switch		A		
Average consumption [5] **Water**	for steam generation		l/h	34,6	63,7
Power	for steam generation		kW	34,2	63

(1) This refers to versions with 230 V and 400 V. For the 415 V versions, the value must be multiplied by 1.0
(2): UNOX hood is provided with a steam condenser
(3) Protection rating against the harmful penetration of water pursuant to international regulation IEC 60529
(4) Not supplied by UNOX
(5) Referred to a simultaneity coefficient of 0.7 (M. Rohatsch, F. Lemme and F. Wagner, Professional Kitchens, Ed. FCSI 2007)
○ Not available
● Not supplied

BAKERTOP MIND.Maps™ PATISSERIE ELECTRIC XEBC	Cooking trays		SIZE	600 x 400					
			N.	4		6		10	
	Oven code: XEBC			ONE	PLUS	ONE	PLUS	ONE	PLUS
				04EU-E1xM	04EU-EPxM	06EU-E1xM	06EU-EPxM	10EU-E1xM	10EU-EPxM
Power	for air heating [1]		kW	7,4	10,4	9,7	13,8	14,55	20,7
	for steam generation [1]		kW	7,4	10,4	9,7	13,8	14,55	20,7
Size	Width		mm	860	860	860	860	860	860
	Depth		mm	967	967	967	967	967	967
	Height		mm	675	675	843	843	1163	1163
Weight	Gross		kg	100	100	115	115	145	145
	net		kg	85	85	100	100	130	130
Thermal load	sensible		kW	1,1	1,1	1,3	1,3	1,7	1,7
	latent	with hood [2]	kW	0	0	0	0	0	0
		without hood	kW	4,7	4,7	7,0	7,0	11,7	11,7
Max food load			kg	20	20	30	30	50	50
IPX_ [3]				IPX4	IPX4	IPX4	IPX4	IPX4	IPX4
220 - 240 V/1PH+N 50 Hz	Absorbed power		kW	7,4	○	○	○	○	○
	Absorbed current		A	32					
	Power cable H07RN-F	Cross-section	mm²	4					
		Length	m	1,5					
		Schuko plug		●					
	Fuses [4] (number of fuses = 2)		A	32					
220-240V/3PH 50Hz	Absorbed power		kW	7,4	10,6	9,9	14,0	14,9	○
	Absorbed current		A	22,7	34	25,7	36	38,6	
	Power cable H07RN-F	Cross-section	mm²	2,5	6	4	6	10	
		Length	m	●	●	●	●	●	
	Fuses [4] (number of fuses = 3)		A	25	40	32	40	50	
380-415V/3PH+N 50Hz	Absorbed power		kW	7,4	10,6	9,9	14,0	14,9	21,0
	Absorbed current		A	13	20	14,8	21,7	22	32,6
	Power cable H07RN-F	Cross-section	mm²	2,5	2,5	2,5	2,5	4	4
		Length	m	1,5	1,5	1,5	1,5	1,5	1,5
	Fuses [4] (number of fuses = 3)		A	20	25	20	25	32	40
Average consumption [5] **Water**	for steam generation		l/h	6,9	9,8	6,9	9,8	10,3	14,7
Average consumption [5] **Power**	for steam generation		kW	6,8	9,7	6,8	9,7	10,2	14,5

(1) This refers to versions with 230 V and 400 V. For the 415 V versions, the value must be multiplied by 1.0
(2): UNOX hood is provided with a steam condenser
(3) Protection rating against the harmful penetration of water pursuant to international regulation IEC 60529
(4) Not supplied by UNOX
(5) Referred to a simultaneity coefficient of 0.7 (M. Rohatsch, F. Lemme and F. Wagner, Professional Kitchens, Ed. FCSI 2007)
○ Not available
● Not supplied

BAKERTOP MIND.Maps™ PATISSERIE ELECTRIC BIG XEBL		Cooking trays		SIZE	600 x 400		
				N.	20		
		Oven code: XEBL			ONE	PLUS	PLUS
					16EU-E1xS	16EU-YPxS	16EU-DPRS
Power		for air heating [1]		kW	33,8	36	36
		for steam generation [1]		kW	33,8	36	36
Size		Width		mm	892	892	892
		Depth		mm	925	925	925
		Height		mm	1875	1875	1875
Weight		Gross		kg	290	300	300
		net		kg	262	279	279
Thermal load		sensible		kW	2,4	2,4	2,4
		latent	with hood [2]	kW	-	-	-
			without hood	kW	18,7	18,7	18,7
Max food load				kg	85	85	85
IPX_ [3]					IPX5	IPX5	IPX5
220-240V/3PH 50Hz		Absorbed power		kW	35,5	○	38,5
		Absorbed current		A	91,5		100
		Power cable H07RN-F	Cross-section	mm²	4G25		4G35
			Length	m	●		●
		Fuses [4] (number of fuses = 3)		A	100		125
380-415V/3PH+N 50Hz		Absorbed power		kW	35,5	38,5	○
		Absorbed current		A	57	65	
		Power cable H07RN-F	Cross-section	mm²	5G16	5G16	
			Length	m	●	●	
		Fuses [4] (number of fuses = 3)		A	63	80	
Average consumption [5]	**Water**	for steam generation		l/h	20,7	26,5	26,5
	Power	for steam generation		kW	20,4	26,2	26,2

(1) This refers to versions with 230 V and 400 V. For the 415 V versions, the value must be multiplied by 1.0
(2): UNOX hood is provided with a steam condenser
(3) Protection rating against the harmful penetration of water pursuant to international regulation IEC 60529
(4) Not supplied by UNOX
(5) Referred to a simultaneity coefficient of 0.7 (M. Rohatsch, F. Lemme and F. Wagner, Professional Kitchens, Ed. FCSI 2007)
○ Not available
● Not supplied

BAKERTOP MIND.Maps™ PATISSERIE GAS XEBC		Cooking trays		SIZE	600 x 400	
				N.	6	10
					PLUS	PLUS
		Oven code: XEBC - XEBL			06EU-GPxM	10EU-GPxM
Power		for air heating [1]		kW	19,0	25,0
		for steam generation [1]		kW	19,0	25,0
Size		Width		mm	860	860
		Depth		mm	967	967
		Height		mm	843	1163
Weight		Gross		kg	125	160
		net		kg	110	145
Thermal load		sensible		kW	1,3	1,7
		latent	with hood [2]	kW	0	0
			without hood	kW	7,0	11,7
Max food load				kg	30,0	50,0
IPX_ [3]					IPX4	IPX4
220-240/1PH+N/ 50 Hz		Absorbed power		kW	1,0	1,4
		Absorbed current		A	3,5	4,3
		Power cable H07RN-F	Cross-section	mm²	1,5	1,5
			Length	m	2,0	2,0
			Schuko plug		√	√
		Fuses [4] (number of fuses = 3)		A	16,0	16,0
Average consumption [5]	Water	for steam generation		l/h	10,6	15,6
	Power	for steam generation		kW	13,7	15,4

BAKERTOP MIND.Maps™ PATISSERIE GAS BIG XEBL		600 x 400	
		16	
		PLUS	
		16EU-GPxS	
Power		48	
		48	
Size		892	
		925	
		1875	
Weight		316	
		302	
Thermal load		2,4	
		20,1	
		19,2	
Max food load		85	
IPX_ [3]		IPX5	
220-240/1PH+N/ 50 Hz		2.5	
		12,5	
		3G1,5	
		2,0	
		●	
		16	
Average consumption [5]	Water	24,7	
	Power	24,4	

TAB. 3. ▶ OTHER TECHNICAL DATA FOR **OVENS**

CHEFTOP MIND.Maps™			
BAKERTOP MIND.Maps™			
Room temperature	Min.	°C	5
	Max.	°C	35
Gas	Connection	in	3/4" - 1" (mod. 20 cooking trays 2/1)
Water	Pressure	kPa	150 - 600
	Connection	in	3/4"
	Supply pipe, ext. ø	mm	10
	Supply pipe, int. ø	mm	7
Water drain	Connection	mm	DN30
Noise level	Pressure level	dB(A)	< 70

TAB. 4. OVENS GAS CONSUMPTION AND MAXIMUM NOMINAL THERMAL LOAD

CHEFTOP MIND.Maps™

OVEN CODE	Female thread fitting	P MAX [kW]							P START [kW]						
		G110	G20	G25	G25.1	G25.3	G30	G31	G110	G20	G25	G25.1	G25.3	G30	G31
XEVC-**05**11-GP*	3/4"	13,5	15	15	15	15	15	15	6,75	9,5	9	9,75	10,5	12	12,25
XEVC-**06**21-GP*	3/4"	19,5	27	25	23	25,5	27	27	9,5	15	17	20	17,5	23,5	21
XEVC-**07**11-GP*	3/4"	14,5	19	19	19	19	19	19	8	7	7,25	8	7,5	12,25	10,5
XEVC-**10**11-GP*	3/4"	18	22	22	22	22	22	22	6,5	14,5	11,25	9,75	8,25	10,5	9,5
XEVC-**10**21-GP*	3/4"	31	42,5	38	37,5	40	42,5	42,5	12	29,5	23,5	25,75	30,5	30,25	29,5
XEVL-**20**11-GP*S	3/4"	39	48	48	48	48	48	48	32	40	40	38	40	46	45
XEVL-**20**21-GP*S	1"		90	86	86	86	90	90		50	45	47	46	47	46

OVEN CODE	Female thread fitting	P MIN [kW]							MAX GAS CONSUMPTION [kg/h]						
		G110	G20	G25	G25.1	G25.3	G30	G31	G110	G20	G25	G25.1	G25.3	G30	G31
XEVC-**05**11-GP*	3/4"	4,25	5	5	4,75	6,25	6,75	6,75	3,674	1,601	1,873	1,850	1,850	0,463	0,614
XEVC-**06**21-GP*	3/4"	6,5	6,5	8,5	10,5	6,5	8,5	8	5,010	2,776	3,099	2,850	3,126	0,847	1,127
XEVC-**07**11-GP*	3/4"	7	6	6,75	7,25	6	7	6,5	3,895	2,059	2,404	2,424	2,360	0,604	0,794
XEVC-**10**11-GP*	3/4"	6,5	5,75	5,5	6,5	5	5,5	6	4,654	2,269	2,697	2,729	2,665	0,686	0,900
XEVC-**10**21-GP*	3/4"	8,25	10,75	10,5	13,5	10	11	11,25	7,916	4,257	4,563	4,523	4,798	1,320	1,760
XEVL-**20**11-GP*S	3/4"	11	11A	10	12	10	18	15	10,065	5,079	5,908	5,898	5,775	1,824	2,406
XEVL-**20**21-GP*S	1"		23	22	22	22	26	25		9,524	10,585	10,567	10,348	3,420	4,511

OVEN CODE	Female thread fitting	MAX GAS CONSUMPTION [kg/h]						
		G110	G20	G25	G25.1	G25.3	G30	G31
XEVC-**05**11-GP*	3/4"	-	-	-	-	-	0,961	0,952
XEVC-**06**21-GP*	3/4"	-	-	-	-	-	1,758	1,747
XEVC-**07**11-GP*	3/4"	-	-	-	-	-	1,253	1,231
XEVC-**10**11-GP*	3/4"	-	-	-	-	-	1,423	1,395
XEVC-**10**21-GP*	3/4"	-	-	-	-	-	2,739	2,728
XEVL-**20**11-GP*S	3/4"	-	-	-	-	-	3,785	3,729
XEVL-**20**21-GP*S	1"	-	-	-	-	-	7,097	6,992

BAKERTOP MIND.Maps™

OVEN CODE	Female thread fitting	P MAX [kW]							P START [kW]						
		G110	G20	G25	G25.1	G25.3	G30	G31	G110	G20	G25	G25.1	G25.3	G30	G31
XEBC-**06**EU-GP*	3/4"	16	19	19	19	19	19	19	11	15	15	15	15	17,5	17
XEBC-**10**EU-GP*	3/4"	20	25	24	23	21	25	25	14	17	17	16	15	19	16,5
XEBC-**16**EU-GP*	3/4"	23	35	31,5	31,5	31,5	35	35	16	21	20	20	20	23	23
XEBL-**16**EU-GP*S	3/4"	39	48	48	48	48	48	48	32	40	40	38	40	46	45

OVEN CODE	Female thread fitting	P MIN [kW]							MAX GAS CONSUMPTION [m³/h]						
		G110	G20	G25	G25.1	G25.3	G30	G31	G110	G20	G25	G25.1	G25.3	G30	G31
XEBC-**06**EU-GP*	3/4"	6,5	5	6,5	6	6	7	6,5	4,129	2,011	2,338	2,340	2,286	0,589	0,777
XEBC-**10**EU-GP*	3/4"	6	6,5	8	8	6,5	8	9	5,161	2,646	2,954	2,833	2,527	0,775	1,023
XEBC-**16**EU-GP*	3/4"	8	9,5	9	9	10	11	11	5,935	3,704	3,877	3,880	3,790	1,085	1,432
XEBL-**16**EU-GP*S	3/4"	11	11	10	12	10	18	15	10,065	5,079	5,908	5,912	5,775	1,489	1,964

OVEN CODE	Female thread fitting	MAX GAS CONSUMPTION [m³/h]						
		G110	G20	G25	G25.1	G25.3	G30	G31
XEBC-**06**EU-GP*	3/4"						1,479	1,458
XEBC-**10**EU-GP*	3/4"						1,946	1,918
XEBC-**16**EU-GP*	3/4"						2,725	2,685
XEBL-**16**EU-GP*S	3/4"						3,737	3,683

TAB. 6. ▶ TECHNICAL DATA FOR **HOODS** WITH VAPOUR CONDENSER

BAKERTOP MIND.Maps™			
Cooking trays		Oven code XEBC - XEBL	Female thread fitting
Size mm	N.		
600x400	6	**06**EU-GPxM	3/4"
	10	**10**EU-GPxM	3/4"
	16	**16**EU-GPxM	3/4"

CHEFTOP MIND.Maps™			
Cooking trays		Oven code XEVC - XEVL	Female thread fitting
Size	N.		
GN1/1	5	**05**11-GPxM	3/4"
	7	**07**11-GPxM	3/4"
	10	**10**11-GPxM	3/4"
	20	**20**11-GPxS	3/4"
GN2/1	6	**06**21-GPxM	3/4"
	10	**10**21-GPxM	3/4"
	20	**20**21-GPxS	1"

TAB. 5. ▶ CONNECTIONS FOR GAS OVENS

Technical data				Hood model							
				XECHC-HC23	XECHC-HC13	XEVHC-HC11	XEBHC-HCEU	XEAHL-HCFL	XEVHC-HC21	XEVHC-HC2F	XECHL-HCFC
Size	Width		mm	535	535	750	860	882	868	882	650
	Depth		mm	900	1100	956	1145	1132	1323	1323	1208
	Height		mm	240	240	240	240	240	240	240	240
Weight	Gross		kg	33	33	36	36	48	56	56	55
	net		kg	20	20	23	25	30	36	36	25
Exhaust gas flue			mm	121	121	121	121	121	121	121	121
Airflow	min.		m^3/h	310	310	310	310	310	310	310	310
	max		m^3/h	390	390	390	390	390	390	390	390
Water pressure			kPa	150 - 600	150 - 600	150 - 600	150 - 600	150 - 600	150 - 600	151 - 600	151-600
IPX_ (1)				5	5	5	5	5	5	5	5
220-240V/1PH+N/ 50 Hz	Absorbed power		kW	0,1	0,1	0,1	0,1	0,1	0,1	0,1	0,1
	Absorbed current		A	0,5	0,5	0,5	0,5	0,5	0,5	0,5	0,5
	Power cable H07RN-F	Cross-section	mm^2	0,75	0,75	0,75	0,75	0,75	0,75	0,75	0,75
		Depth	m	1,5	1,5	1,5	1,5	1,5	1,5	1,5	1,5
		Schuko plug		supplied							
	Fuses (2) (no. of fuses = 2)		A	2	2	2	2	2	2	2	2

(1) Protection rating against the harmful penetration of water pursuant to international regulation IEC 60529.
(2) Not supplied by UNOX.

TAB. 7. SLOWTOP AND PROVERS TECHNICAL DATA

Technical data				SlowTop XEVSC		Provers		
						XEBPC		XEVPC
				0711-CR	0711-CL	08EU-B	12EU-B	0421-B-CB
Size	Width		mm		750	860	860	750
	Depth		mm		792	978	978	750
	Height		mm	961	961	658	798	915
Weight	Gross		kg	75	75	43	46	38
	net		kg	63	63	35	40	35
Capacity			-	7	7	8	12	40
Type of tray				GN1/1	GN 1/2	600x400	600x400	530x325
Tray pitch			mm	70	70	75	75	105
Max food load			kg	35	35	40	60	36
Water pressure			kPa	150 - 600	150-600	150-600	150-600	150-600
Max. temperature			°C	180	180	50	50	50
IPX_ (1)				4	4	4	4	4
220-240V/1PH+N/ 50 Hz	Absorbed power		kW	3,2	3,2	2,3	2,3	2,3
	Absorbed current		A	14,0	14,0	10,5	10,5	10,5
	Power cable H07RN-F	Cross-section	mm²	1,5	1,5	1,5	1,5	1,5
		Depth	m	1,5	1,5	1,5	1,5	1,5
		Schuko plug		Supplied				
	Fuses (2) (no. of fuses = 2)		A	16	16			

TAB. 8. TECHNICAL DATA OF THE DECKTOP

Technical data				DeckTop model			
				XEBDC 01EU-C	XEBDC 01EU-D	XEBDC 02EU-C	XEBDC 02EU-D
Size	Width		mm	860		860	
	Depth		mm	502		502	
	Height		mm	926		1196	
Weight	Gross		kg	75		106	
	net		kg	62		80	
Capacity			-	1		2	
Type of tray				600x400			
Water pressure			kPa	150 - 600			
Maximum temperature			°C	35°C			
IP (1)				X4			
220-240V/1PH+N/ 50 Hz	Absorbed power		kW	2,7		5,4	
	Absorbed current		A	12,0		12,0	
	Power cable H07RN-F	Cross-section	mm²	3x1,5		5Gx1,5mm²	
		Depth	m	1,5		1,5	
		Schuko plug		**supplied**		**not supplied**	

(1) Protection rating against the harmful penetration of water pursuant to international regulation IEC 60529.
(2) Not supplied by UNOX.
(3) XEVS-0711-R can be controlled from a touchscreen display of a UNOX oven.

TAB. 9. ▶ PROVERS FOR OVENS

		Cooking trays		Oven model		Prover model
		Size (mm)	N.			
BAKERTOP MIND.Maps™	Electric	600 x 400	4	XEBC-**04**EU-E1xM	ONE	XEBPC-08EU-B XEBPC-12EU-B
			4	XEBC-**04**EU-EPxM	PLUS	
			6	XEBC-**06**EU-E1xM	ONE	
			6	XEBC-**06**EU-EPxM	PLUS	
			10	XEBC-**10**EU-E1xM	ONE	
			10	XEBC-**10**EU-EPxM	PLUS	
			16	XEBL-**16**EU-E1xS	ONE	XEBPL-16EU-M XEBPL-16EU-D
			16	XEBL-**16**EU-YPxS	PLUS	
			16	XEBL-**16**EU-DPxS	PLUS	
	Gas	600 x 400	6	XEBC-**06**EU-GPxM	PLUS	XEBPC-08EU-B XEBPC-12EU-B
			10	XEBC-**10**EU-GPxM	PLUS	
			16	XEBL-**16**EU-GPxS	PLUS	XEBPL-16EU-M XEBPL-16EU-D

Prover models ending with a D can be used only if it is connected to a UNOX oven and controlled using the touchscreen display
Prover models ending with an M are standalone and can be used via the in-built manual controls.

TAB. 10. ▶ KEEP WARM FOR OVENS

	CHEFTOP MIND.Maps™	Cooking trays			Oven model		Keep warm sensor mod.
		Size (mm)		N.			
CUISINE	Electric	GN 1/3	325 x 175	5	XECC-**05**13-EPxM	PLUS	not available
				5	XECC-**10**13-EPxM	PLUS	not available
		GN 2/3	354 x 325	5	XECC-**05**23-E1xM	ONE	not available
				5	XECC-**05**23-EPxM	PLUS	
		GN 1/1	530 x 325	5	XECC-**05**13-EPxM	PLUS	XEVSC-0711-CR
				3	XEVC-**03**11-E1xM	ONE	
				3	XEVC-**03**11-EPxM	PLUS	
				5	XEVC-**05**11-E1xM	ONE	
				5	XEVC-**05**11-E1xM-LP	ONE	
				5	XEVC-**05**11-EPxM	PLUS	
				7	XEVC-**07**11-E1xM	ONE	
				7	XEVC-**07**11-EPxM	PLUS	
				10	XEVC-**10**11-E1xM	ONE	
				10	XEVC-**10**11-EPxM	PLUS	
				20	XEVL-**20**11-E1xS	ONE	not available
				20	XEVL-**20**11-YPxS	PLUS	
				20	XEVL-**20**11-DPxS	PLUS	
		GN 2/1	530 x 650	6	XEVC-**06**21-EPxM	PLUS	not available
				10	XEVC-**10**21-EPxM	PLUS	
				20	XEVL-**20**21-YPxS	PLUS	
				20	XEVL-**20**21-DPxS	PLUS	
	Gas	GN 1/1	530 x 325	5	XEVC-**05**11-GPxM	PLUS	XEVSC-07 11-CR
				7	XEVC-**07**11-GPxM	PLUS	
				10	XEVC-**10**11-GPxM	PLUS	
				20	XEVL-**20**11-GPxS	PLUS	not available
		GN 2/1	530 x 650	6	XEVC-**06**21-GPxM	PLUS	not available
				10	XEVC-**10**21-GPxM	PLUS	
				20	XEVL-**20**21-GPxS	PLUS	

TAB. 11. ▶ HOODS FOR OVENS

		Cooking trays			Oven model		Hood model
		Size (mm)		N.			
CHEFTOP MIND.Maps™	Electric	GN 1/3	325 x 175	5	XECC-0513-EPxM	PLUS	XECHC-HC13
				5	XECC-1013-EPxM	PLUS	
		GN 2/3	353 x 325	5	XECC-0523-E1xM	ONE	XECHC-HC23
				5	XECC-0523-EPxM	PLUS	
		GN 1/1	530 x 325	3	XEVC-0311-E1xM	ONE	XEVHC-HC11
				3	XEVC-0311-EPxM	PLUS	
				5	XEVC-0511-E1xM	ONE	
				5	XEVC-0511-E1xM-LP	ONE	
				5	XEVC-0511-EPxM	PLUS	
				5	XEVC-0511-EZxM	ZERO	
				5	XEVC-0511-EZxM-LP	ZERO	
				7	XEVC-0711-E1xM	ONE	
				7	XEVC-0711-EPxM	PLUS	
				7	XEVC-0711-EZxM	ZERO	
				10	XEVC-1011-E1xM	ZERO	
				10	XEVC-1011-EPxM	PLUS	
				10	XEVC-1011-EZxM	ZERO	
		GN 1/1	530 x 325	20	XEVL-2011-E1xS	ONE	XEAHL-HCFL
				20	XEVL-2011-YPxS	PLUS	
				20	XEVL-2011-DPxS	PLUS	
		GN 2/1	650 x 530	6	XEVC-0621-EPxM	PLUS	XEVHC-HC21
				10	XEVC-1021-EPxM	PLUS	
				20	XEVL-2021-YPxS	PLUS	not available
				20	XEVL-2021-DPxS	PLUS	
		GN 1/3	325 X 530	20	XECL-2013-E1xS	ONE	XECHL-HCFC
				20	XECL-2013-YPxS	PLUS	
BAKERTOP MIND.Maps™	Electric	600x400		4	XEBC-04EU-E1xM	ONE	XEBHC-HCEU
				4	XEBC-04EU-EPxM	PLUS	
				6	XEBC-06EU-E1xM	ONE	
				6	XEBC-06EU-EPxM	PLUS	
				10	XEBC-10EU-E1xM	ONE	
				10	XEBC-10EU-EPxM	PLUS	
				16	XEBL-16EU-E1xS	ONE	XEAHL-HCFL
				16	XEBL-16EU-YPxS	PLUS	
				16	XEBL-16EU-DPxS	PLUS	

Installation

INSTALLATION | TRANSPORTING THE APPLIANCE 24

INSTALLATION | POSITIONING 24
- INSTALLING COUNTERTOP OVENS 27
- INSTALLING FREE-STANDING OVENS (BIG) 28

INSTALLATION | CONNECTIONS 29
- ELECTRICAL CONNECTIONS 30
- GAS CONNECTION 31
- EVACUATING EXHAUST SMOKE 32
- PLUMBING CONNECTIONS 33

INSTALLATION | WASHES 49

INSTALLATION | LINK 51

INSTALLATION | COOKING AND BAKING ESSENTIALS 55

Installation

Units must be transported on an original pallet provided by UNOX to prevent damage.

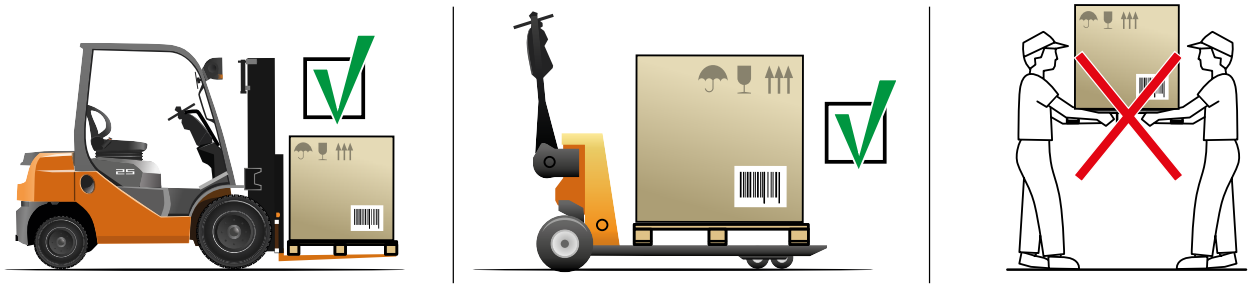

01

When transporting the pallet, keep in mind the measurements indicated in the tables below.

TAB. 12. ▸ PALLET WIDTH

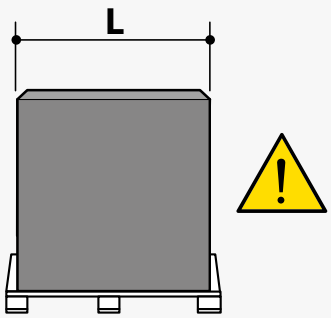

	Type of tray	Installation	Pallet width
CHEFTOP MIND.Maps	GN 1/3	Countertop	740 mm
	GN 1/3	Free-standing	778 mm
	GN 2/3	Countertop	740 mm
	GN 1/1	Countertop	857 mm
		Free-standing	972 mm
	GN 2/1	Countertop	972 mm
BAKERTOP MIND.Maps	600× 400	Countertop	968 mm
		Free-standing	972 mm

TAB. 13. ▸ PACKAGING SIZE FOR BAKERTOP MIND.Maps™ ovens

	BAKERTOP MIND.Maps™	Type	Packaging size Width x Depth x Height	Oven model		Installation
XEBC	Electric	600 x 400	968x1053x866 mm	ONE	XEBC-**04**EU-E1xM	Countertop
			968x1053x1026 mm	ONE	XEBC-**06**EU-E1xM	Countertop
			968x1053x1345 mm	ONE	XEBC-**10**EU-E1xM	Countertop
			968x1053x866 mm	PLUS	XEBC-**04**EU-EPxM	Countertop
			968x1053x1026 mm	PLUS	XEBC-**06**EU-EPxM	Countertop
			968x1053x1345 mm	PLUS	XEBC-**10**EU-EPxM	Countertop
	Gas		968x1053x1026 mm	PLUS	XEBC-**06**EU-GPxM	Countertop
			968x1053x1345 mm	PLUS	XEBC-**10**EU-GPxM	Countertop
BIG XEBL	Electric	600 x 400	972x1196x2038 mm	ONE	XEBL-**16**EU-E1RS	Free-standing
			972x1196x2038 mm	PLUS	XEBL-**16**EU-YPRS	Free-standing
			972x1196x2038 mm	PLUS	XEBL-**16**EU-DPRS	Free-standing
	Gas		972x1196x2038 mm	PLUS	XEBL-**16**EU-GPRS	Free-standing

TAB. 14. ▶ PACKAGING SIZE FOR CHEFTOP MIND.Maps™ ovens

	CHEFTOP MIND. Maps™	Tipo	Packaging size [mm] Width x Depth x Height	Oven model		Installation
COMPACT XECC	Electric	GN2/3	740x1040x830	ONE	XECC-**05**23-E1xM	Countertop
			740x1040x830	PLUS	XECC-**05**23-EPxM	Countertop
		GN1/3	740x1036x830	PLUS	XECC-**05**13-EPxM	Countertop
			740x1040x830	PLUS	XECC-**10**13-EPxM	Countertop
XEVC	Electric	GN1/1	857x947x733	ONE	XEVC-**03**11-E1xM	Countertop
			857x947x858	ONE	XEVC-**05**11-E1xM	Countertop
			857x947x858	ONE	XEVC-**05**11-E1xM-LP	Countertop
			857x947x1027	ONE	XEVC-**07**11-E1xM	Countertop
			857x947x1197	ONE	XEVC-**10**11-E1xM	Countertop
			857x947x733	PLUS	XEVC-**03**11-EPXM	Countertop
			857x947x858	PLUS	XEVC-**05**11-EPxM	Countertop
			857x947x1027	PLUS	XEVC-**07**11-EPxM	Countertop
			857x947x1197	PLUS	XEVC-**10**11-EPxM	Countertop
			857x947x858	ZERO	XEVC-**05**11-EZxM	Countertop
			857x947x858	ZERO	XEVC-**05**11-EZxM-LP	Countertop
			857x947x1027	ZERO	XEVC-**07**11-EZxM	Countertop
			857x947x1197	ZERO	XEVC-**10**11-EZxM	Countertop
		GN2/1	955x1430x1026	PLUS	XEVC-**06**21-EPxM	Countertop
			955x1430x1347	PLUS	XEVC-**10**21-EPxM	Countertop
	Gas	GN1/1	857x947x858	PLUS	XEVC-**05**11-GPxM	Countertop
			857x947x1027	PLUS	XEVC-**07**11-GPxM	Countertop
			857x947x1197	PLUS	XEVC-**10**11-GPxM	Countertop
		GN2/1	955x1430x1026	PLUS	XEVC-**06**21-GPxM	Countertop
			955x1430x1347	PLUS	XEVC-**10**21-GPxM	Countertop
BIG XEVL	Electric	GN1/1	972x1196x2032	ONE	XEVL-**20**11-E1xS	Free-standing
			972x1196x2032	PLUS	XEVL-**20**11-YPxS	Free-standing
			972x1196x2032	PLUS	XEVL-**20**11-DPxS	Free-standing
		GN2/1	972x1435x2038	PLUS	XEVL-**20**21-YPxS	Free-standing
			972x1435x2038	PLUS	XEVL-**20**21-DPxS	Free-standing
	Gas	GN1/1	972x1196x2038	PLUS	XEVL-**20**11-GPxS	Free-standing
		GN2/1	972x1435x2032	PLUS	XEVL-**20**21-GPxS	Free-standing
BIG COMPACT XECL	Electric	GN1/3	778x1272x2040	ONE	XECL-**20**13-E1xS	Free-standing
		GN1/3	778x1272x2040	PLUS	XECL-**20**13-YPxS	Free-standing

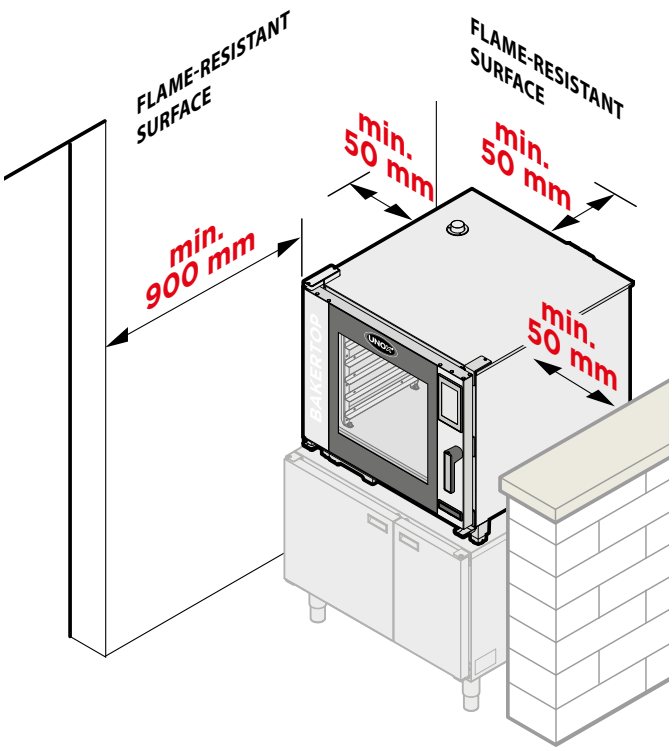

The installation site must:

- be suitable for cooking industrial foods;
- be protected from the weather;
- have adequate air ventilation;
- be **+5°C to 35°C** maximum;
- have a maximum humidity of **70%**.

- When installing the appliances, observe the distances shown in figures 02

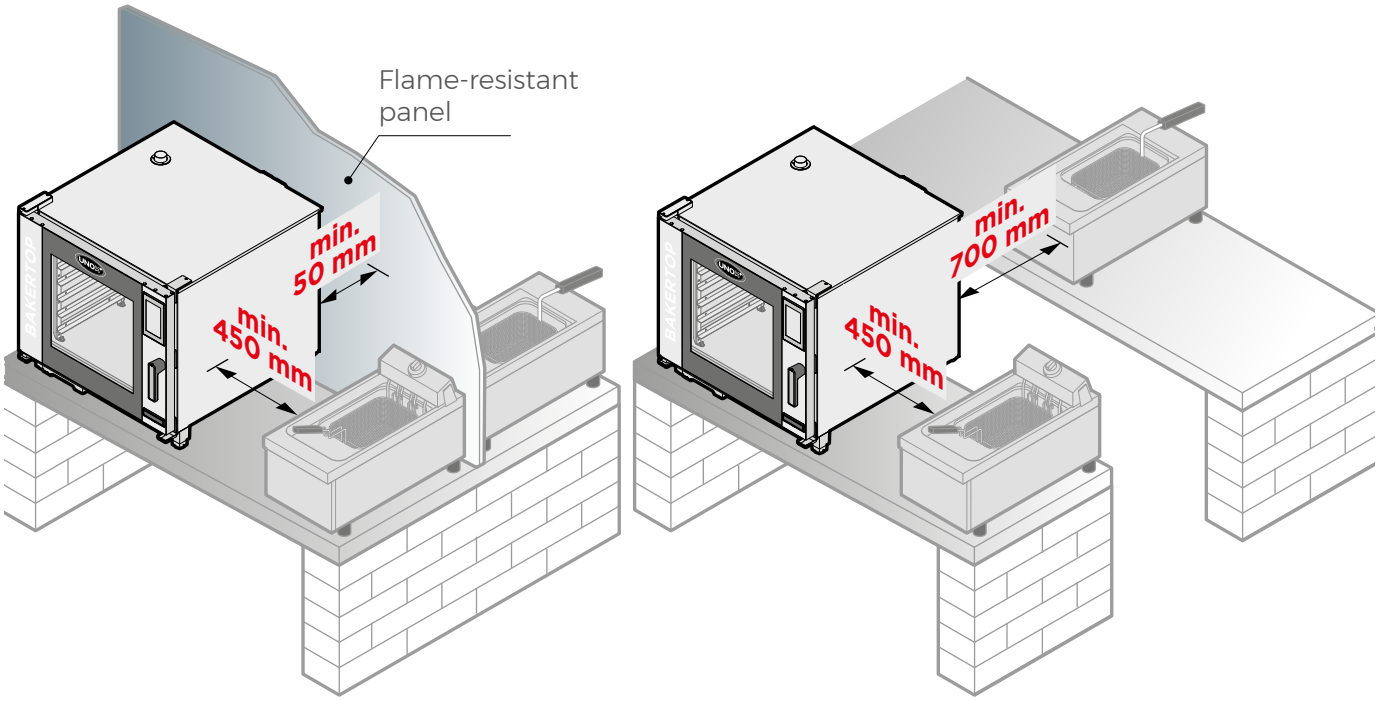

02

INSTALLING COUNTERTOP OVENS

Countertop ovens are equipped with 4 plastic feet (height: 100 mm). They can be positioned:

- on substructures;
- on wheels (with the optional UNOX wheel kit);
- stacked on other UNOX ovens or accessories (prover, stand, cabinet, etc.);
- on the floor.

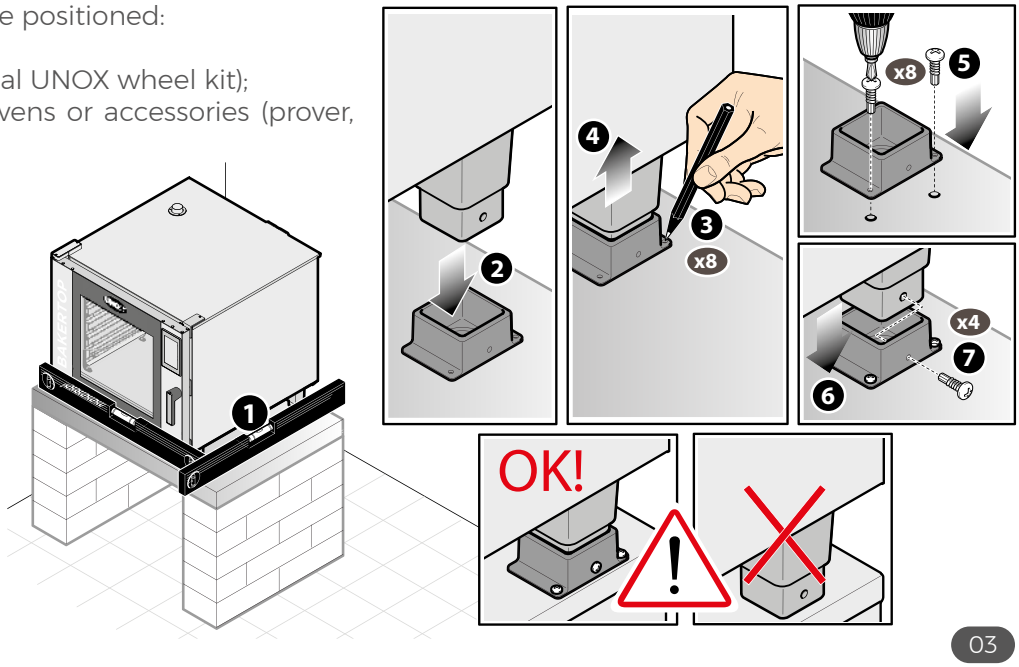

03

To fasten the oven to the table, use the feet kit shown in figures ▶ 03 04

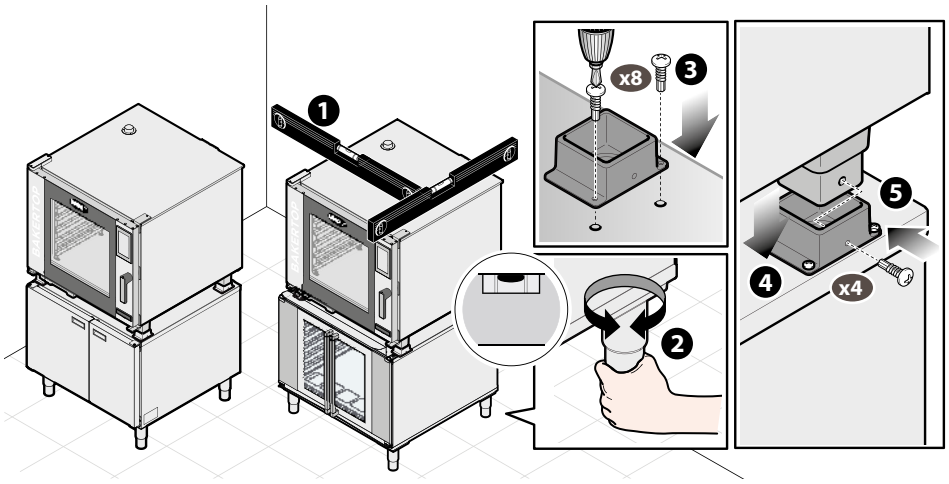

04

To install free-standing appliances, remove the plastic feet; there are two UNOX kits (see figure ▶ 05):

- UNOX XUC012 wheel kit: this includes 2 safety chains, 2 wheels with a brake and 2 wheels without a brake.
- XWARC-00EF-F low stand kit for EU trays (600x400) and FS (Full size) trays, XWVRC-0011-F kit for GN1/1 trays, XWVRC-0021-F kit for GN2/1 trays.

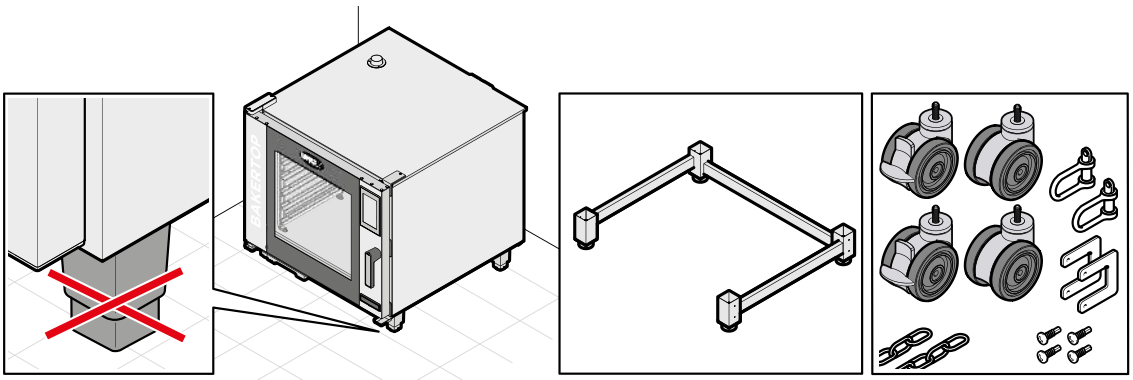

05

INSTALLING FREE-STANDING OVENS (BIG)

The floor where the ovens are installed must have the following characteristics:

- be flame and heat resistant;
- are able to support the appliance weight at full load without undergoing deformation or structural failure.

06 All free-standing ovens are equipped with 4 adjustable feet (147-190 mm).
Minimum height from the ground must be **173 mm** to give the trolley easy access.

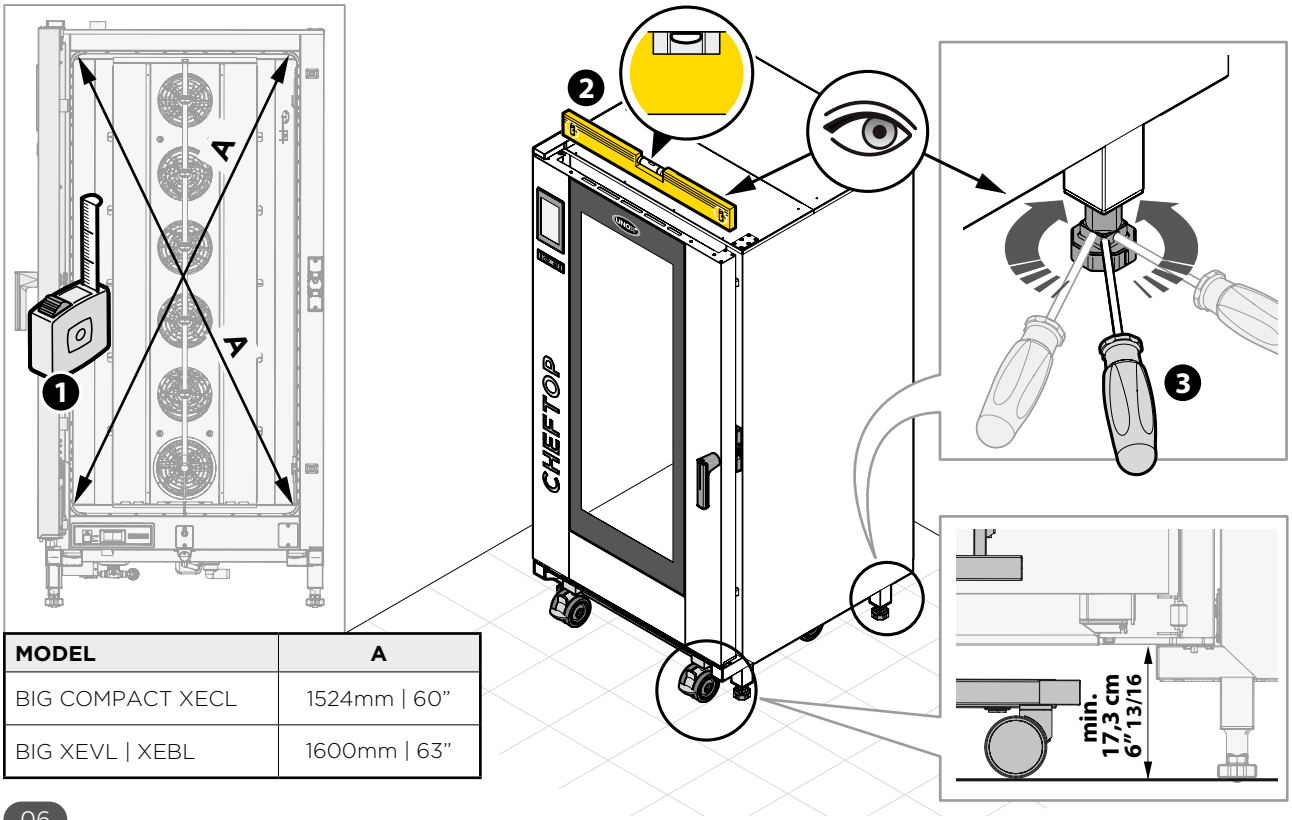

MODEL	A
BIG COMPACT XECL	1524mm | 60"
BIG XEVL | XEBL	1600mm | 63"

06

07 If the floor is not perfectly level, a loading ramp with a maximum incline of 4° may be used to simplify the loading of the trolley. The maximum floor incline is of 2°.

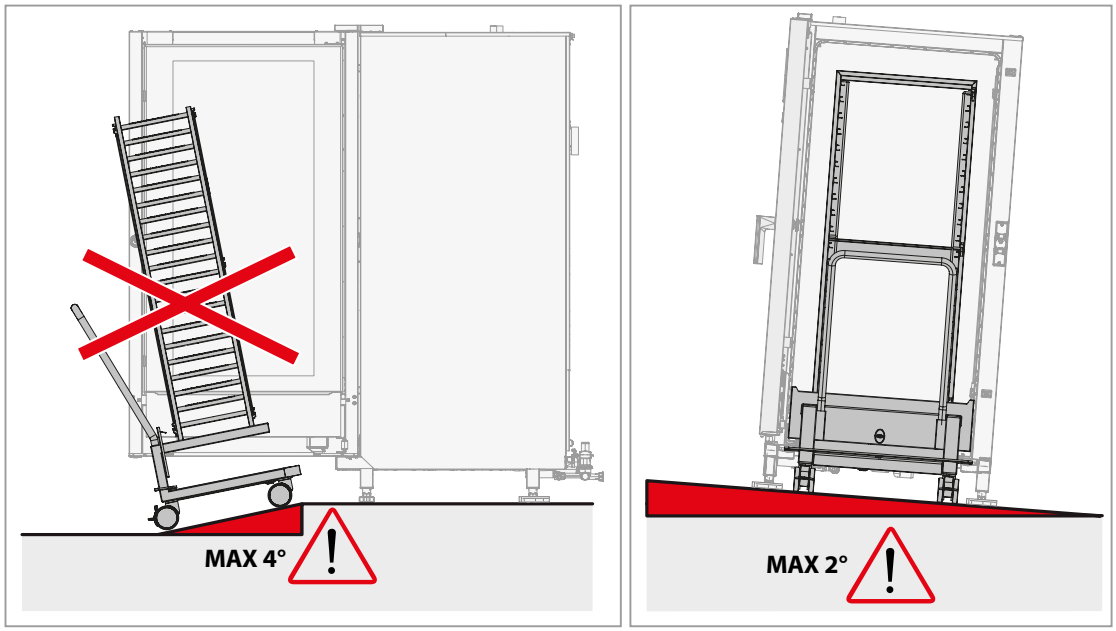

07

The installation area must be equipped with electrical, plumbing and gas utilities (only for gas ovens) that comply with the system and operational safety regulations in the country of use.

08 Required connections:

- electrical connection
- water inlet connection
- gas connection (where applicable)
- S drain

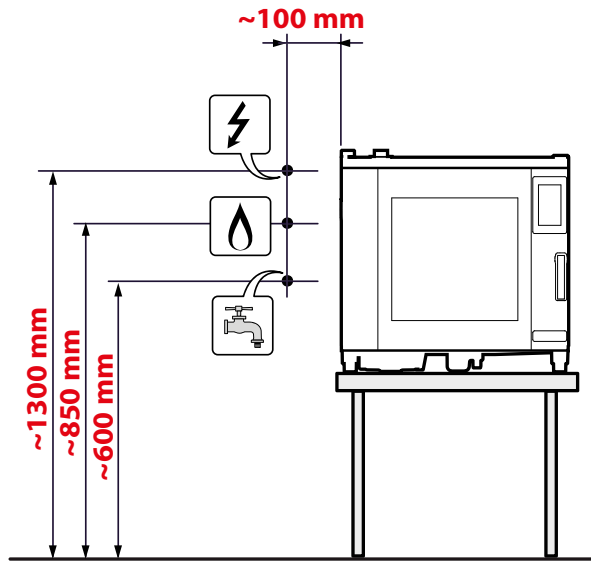

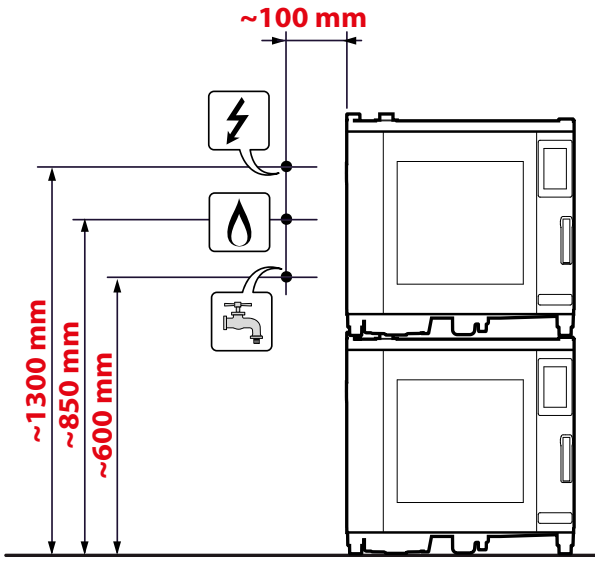

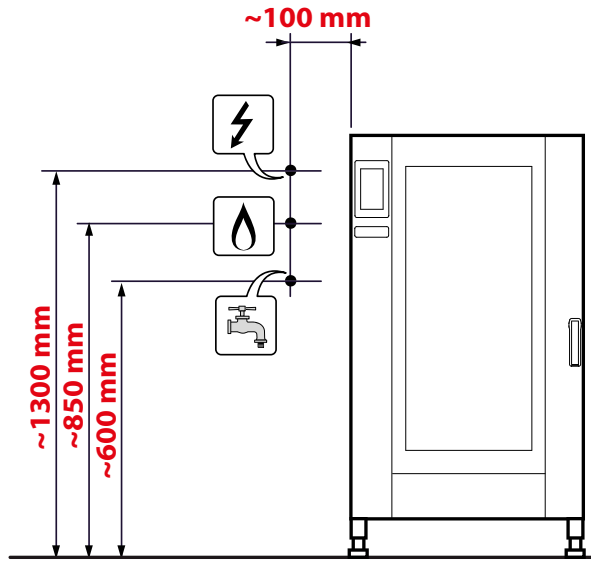

08

ELECTRICAL CONNECTIONS

The electrical connections must comply with the standards in force in the country.
Every appliance can be connected to the power supply via a permanent or plug connection ▶ 09.

For the electrical connections to be made correctly, the appliances must:

- be wired into an equipotential system in accordance with current regulations ▶ 10. The terminals marked with the equipotential symbol must be connected between them using a connection cable with a nominal cross-section of up to 10 mm² (pursuant to standard IEC 60335-2-42);
- be connected to the protection device against earth faults (yellow-green wire).

For all standard voltage systems available for each appliance, see page 8 - **TAB. 2.** ▶ **TECHNICAL DATA FOR OVENS**.

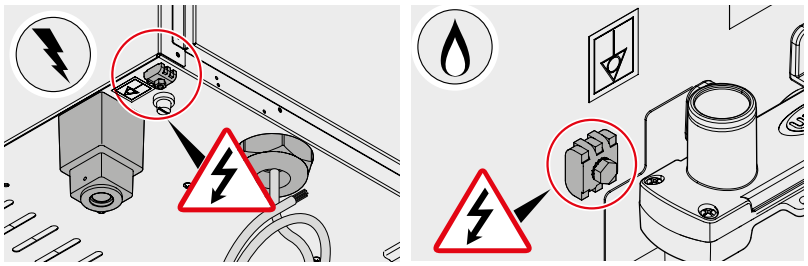

10

Multi-polar circuit breaker

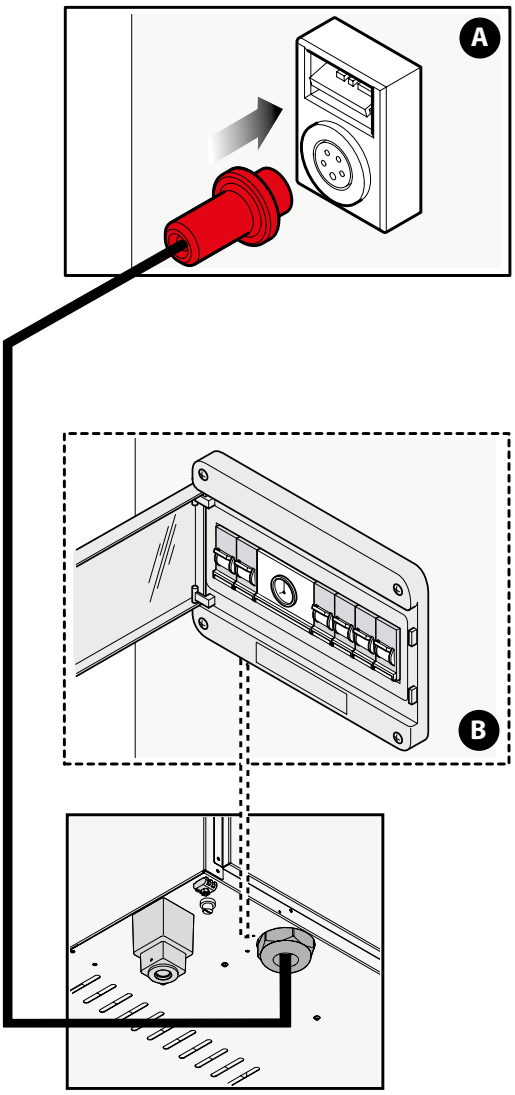

09

GAS CONNECTION

Connection to the gas supply must comply with the national standards in force. Each unit is pre-set to run with natural gas -> G20.

To switch to:

- gas G110, G25, G25.1 and G25.3, you need to change the settings.
- LPG G30 and G31, you need to change the gas injector and the settings

Each unit is equipped with a 3/4" or 1" female threaded gas fitting, depending on the model (see **TAB. 5. CONNECTIONS FOR GAS OVENS** on page 19). To install and connect each appliance, use the hose with a shut-off valve upstream the appliance.
The hose and shut-off valve are not supplied.

Special adjustments are not needed when using this appliance at high altitudes, but please check and measure the emissions of CO and CO_2.

The default gas type can only be modified by UNOX technicians or technicians authorised by UNOX.

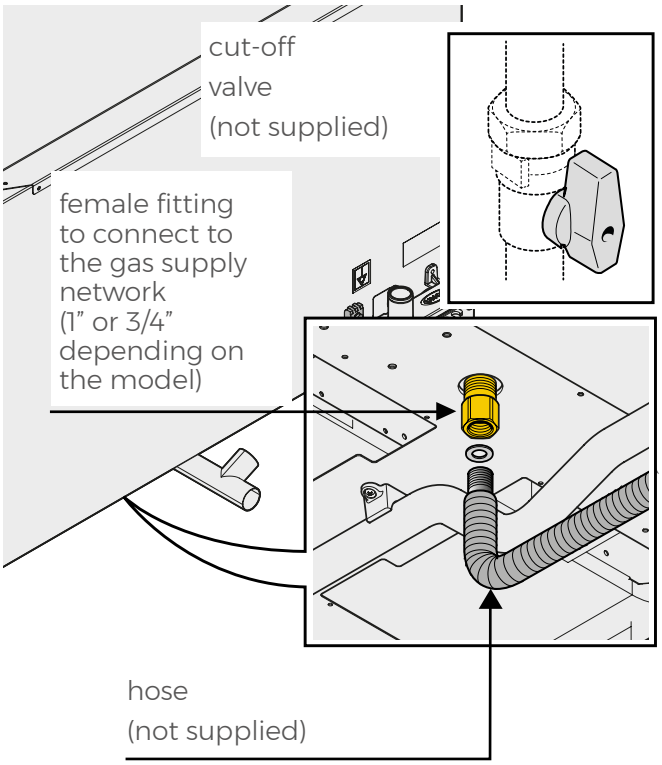

11

EVACUATING EXHAUST SMOKE

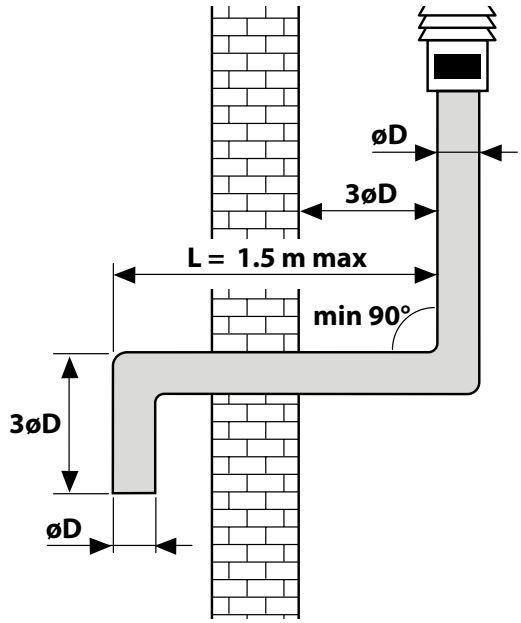

12

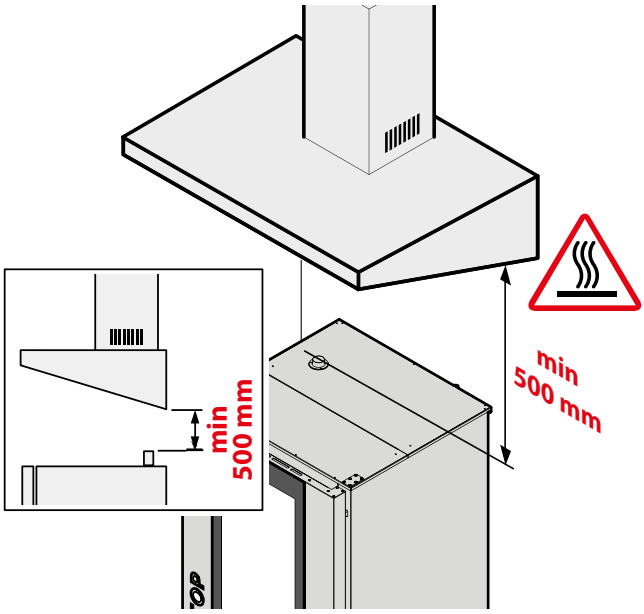

13 Electrical appliances

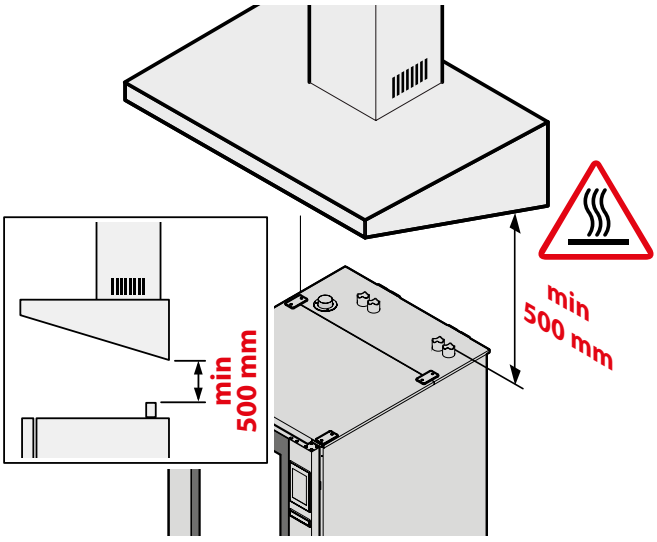

14 Gas appliances

The exhaust pipe(s) evacuate smoke and odours from the oven cavity, as well as the exhaust gases, in the case of gas appliances.

There are various external evacuation methods. Choose the method most suited to the appliance to be installed and follow the local/national installation regulations in the country of use.

- 12 **Evacuation via an efficient ventilation flue**. Ventilation must comply with the following specifications:
  - have the same diameter (øD) throughout its entire length;
  - be provided with a rising pipe (3øD) on the ventilation hose;
  - follow an upward trajectory at a minimum incline of 10%, and must incorporate no angles smaller than 90 degrees. The horizontal part (L) must not exceed 1.5 metres in length.

  In this case, you must also use a smoke flue. This is not supplied with the appliance but it is available as an optional.

- 13 **Evacuation via an extractor hood** – customer's own or supplied by UNOX – (in this case the hood is controlled directly via a self-diagnosis system in the oven). The hood must be installed at least 500 mm from the oven exhaust pipe(s).

Exhaust gases may heat up to 500°C. Do not use exhaust pipes made of aluminium or other materials which are not compatible with acidic condensation or are not resistant to these temperatures.

We recommend a flue cover be installed on top of the external end of the flue, to prevent rainwater from getting into the oven and to minimise pressure drops caused by the Venturi effect, which can occur during strong air currents.

PLUMBING CONNECTIONS

Plumbing connections include:

- a 2 bar pressure reducer;
- a normally open switch;
- 1.5 m hose;
- a mechanical filter;
- a 3/4" water fitting with check valve.

We recommend installing a water tap before the water inlet connection (not provided).

Countertop ovens | XEVC - XECC - XEBC

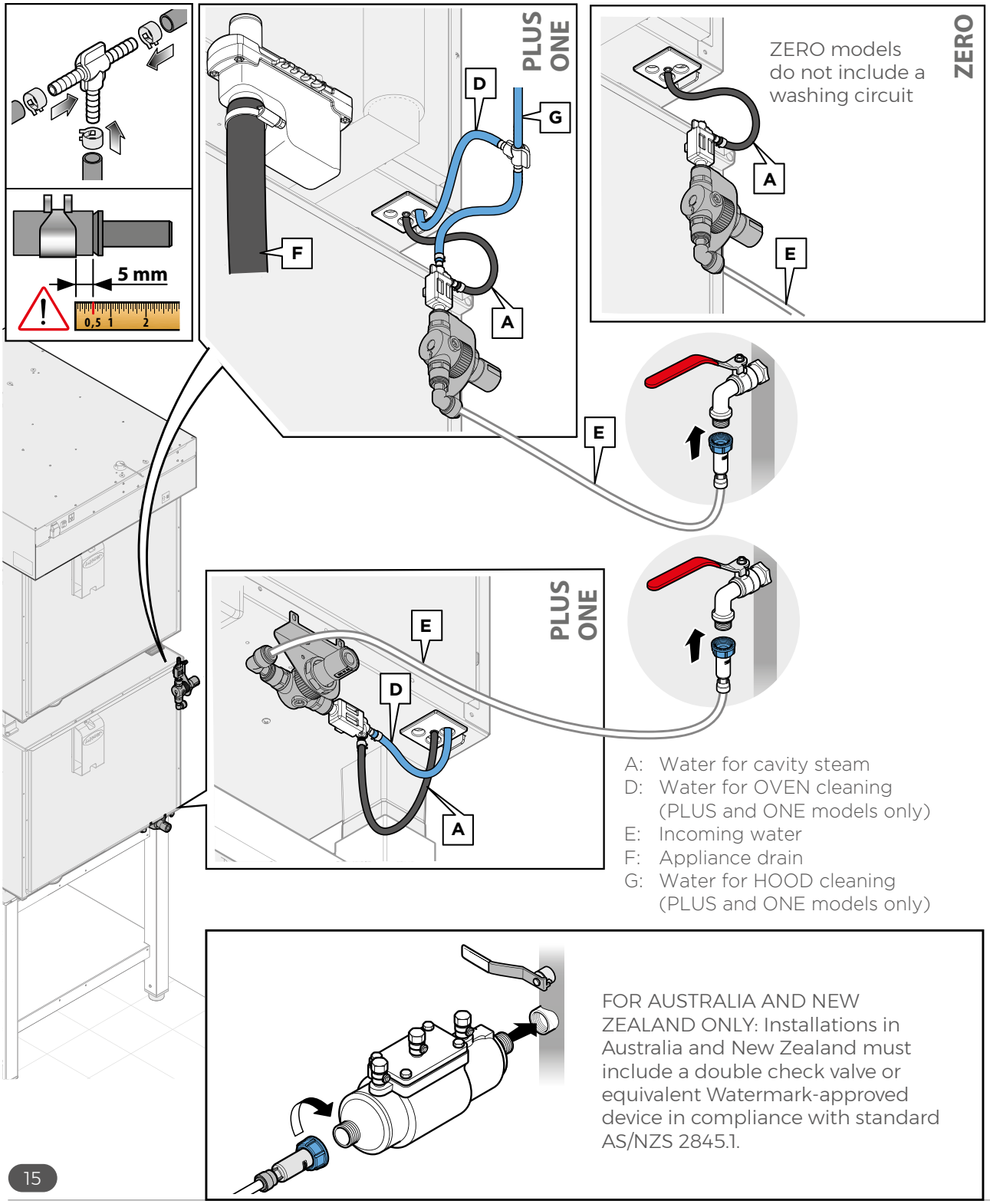

A: Water for cavity steam
D: Water for OVEN cleaning (PLUS and ONE models only)
E: Incoming water
F: Appliance drain
G: Water for HOOD cleaning (PLUS and ONE models only)
H: Detergent pipe

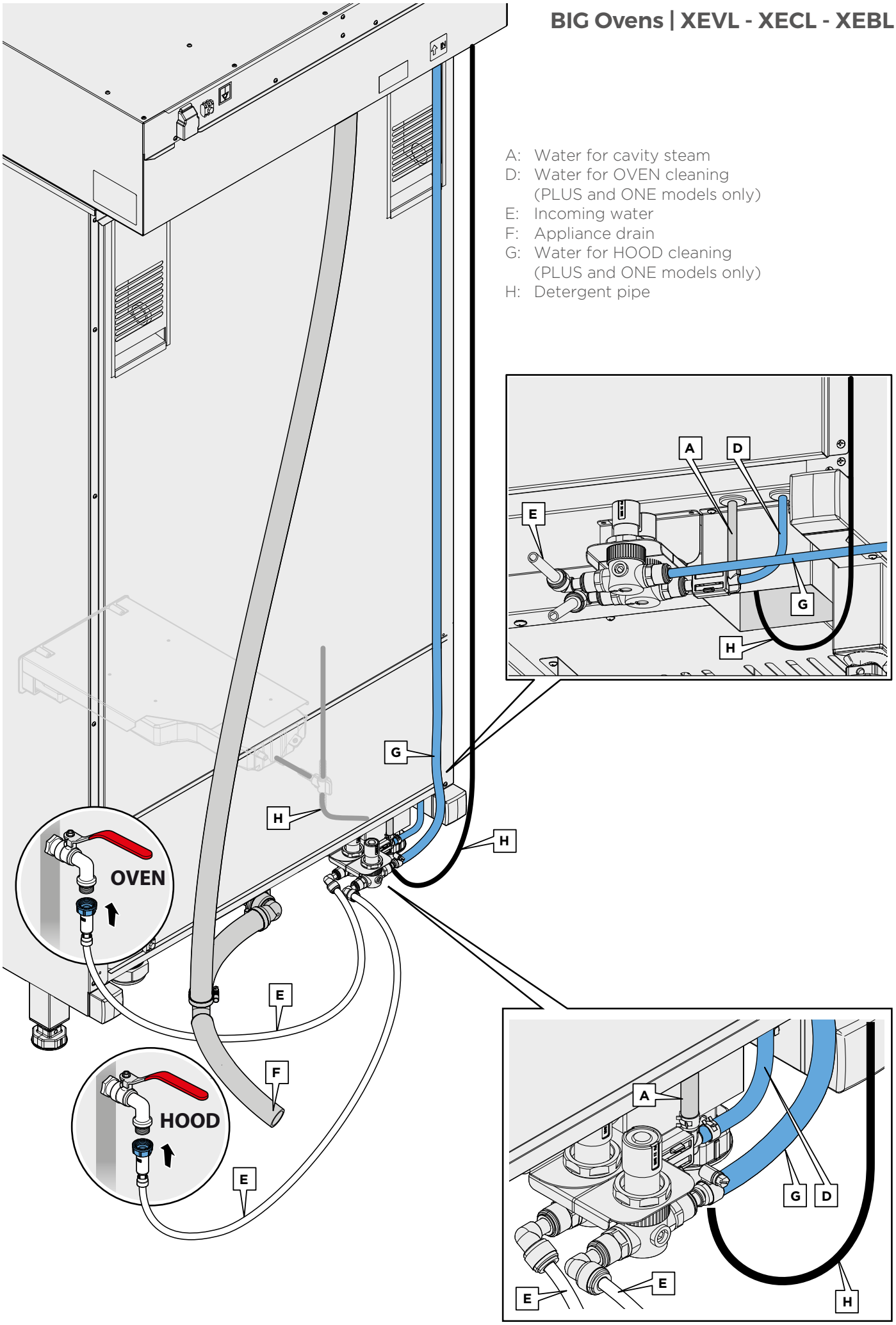

INCOMING WATER CHARACTERISTICS

The incoming water characteristics depend on the kind of stainless steel used in the cookinging chamber: **AISI304** or **AISI316L**.
Some common incoming water characteristics are:
- maximum temperature of **30˚C**;
- be drinkable;
- minimum pressure **150 kPa**; maximum pressure **600 kPa**; recommended pressure **200 kPa** (all CHEFTOP-BAKERTOP MIND.Maps™ ovens come with an integrated pressure reducer as standard).
- minimum flow rate: **300 l/h**;
- maximum water conductivity of **1000 µS/cm**. If the water conductivity exceeds 1000 µS/cm, the water used for producing steam must be treated.

In addition to these characteristics, the incoming water must respect all the parameters specified below. It is the responsibility of the purchaser to ensure that the incoming water supply is compliant with the listed specifications through adequate treatment measures.
Using a water supply that does not meet Unox's minimum water quality standards will void any warranty.

| XEVC, XECC AND XEBC OVENS WITH AISI 304 COOKING CAVITY

Line pressure
- Drinking water inlet: 3/4" NPT*
- Line pressure: 22 to 87 psi; 1.5 to 6 Bar (29 psi; 2 Bar recommended)

Inflow water specifications
- Free chlorine ≤ 0.5 ppm
- Chloramine ≤ 0,1 ppm (mg/L)
- pH 7 ÷ 8,5
- Electrical conductivity: 1000 µS/cm
- Total hardness (TH) ≤ 30 ˚dH
- Chlorides* ≤ 120 ppm**

Steam circuit: inflow water specifications
- Total hardness (TH) ≤ 8 ˚dH *
- Chlorides* ≤ 25 ppm**

*this value refers to daily steam cooking of 1- 2 hours. In any case, if with a total hardness ≤ 8°dH there is still production of limescale, it is mandatory to treat the water in order to avoid limescale production. We recommend water treatment systems based on ion exchange resins. Water treatment systems based on polyphosphates are not allowed.
The total hardness can be measured using the KSTR1082A kit or with equivalent tools

** The maximum chloride content, Cl-, is not a fixed value; it depends on the calculated Non Hardness Measurement (NHM)

NHM = EC - (TH x 30)**
EC = electrical conductivity [µS/cm]
TH = total hardness** [˚ dH - German degrees]

NHM ≤ 250 µS/cm	TH < 8 ˚dH, Cl- ≤ 25 ppm (5 drops of reagent*)	No water treatment
	TH ≥ 8 ˚dH, Cl- ≤ 25 ppm (5 drops of reagent*)	UNOX.Pure
	Cl- > 25 ppm (5 drops of reagent*)	UNOX.Pure-RO
NHM = 250 - 350 µS/cm	Cl- ≤ 20 ppm (4 drops of reagent*)	UNOX.Pure
	Cl- > 20 ppm (4 drops of reagent*)	UNOX.Pure-RO
NHM = 350 – 450 µS/cm	Cl- ≤ 15 ppm (3 drops of reagent*)	UNOX.Pure
	Cl- > 15 ppm (3 drops of reagent*)	UNOX.Pure-RO
NHM = 450 – 500 µS/cm	Cl- ≤ 10 ppm (2 drops of reagent*)	UNOX.Pure
	Cl- > 10 ppm (2 drops of reagent*)	UNOX.Pure-RO
NHM ≥ 500 µS/cm		UNOX.Pure-RO

* use the reagent in the UNOX KSTR1081A kit ** hardness measured using the UNOX KSTR1082A kit

If you need to install an UNOX.Pure-RO, please take note of the following information:

	1 UNOX.Pure-RO osmosis filter	2 parallel UNOX.Pure-RO osmosis filters	
1 motor	√		
2 motors	< 15 ˚dH < 450 µS/cm	> 15 ˚dH	> 450 µS/cm
3 motors	< 10 ˚dH < 300 µS/cm	> 10 ˚dH	> 300 µS/cm

Line pressure
- Drinking water inlet: 3/4" NPT*
- Line pressure: 22 to 87 psi; 1.5 to 6 Bar (29 psi; 2 Bar recommended)

Inflow water specifications
- Free chlorine ≤ 0.5 ppm
- Chloramine ≤ 0,1 ppm (mg/L)
- pH 7 ÷ 8,5
- Electrical conductivity: 1000 µS/cm
- Total hardness (TH) ≤ 30 °dH

Steam circuit: inflow water specifications
- Total hardness (TH) ≤ 8 °dH *
- Chlorides* ≤ 250 ppm

*this value refers to daily steam cooking of 1- 2 hours. In any case, if with a total hardness ≤ 8°dH there is still production of limescale, it is mandatory to treat the water in order to avoid limescale production. We recommend water treatment systems based on ion exchange resins. Water treatment systems based on polyphosphates are not allowed. The total hardness can be measured using the KSTR1082A kit or with equivalent tools

To avoid the formation of **limescale**, the incoming water must have the following chemical/physical characteristics:

- Total hardness (TH) ≤ 8°dH

If the total hardness is above 8°dH, treat the water according to the following table:

	ONE	PLUS	
Treatment	XEVL-2011-E1xS XEBL-16EU-E1xS XECL-2013-E1xS	XEVL-2011-YPxS XEVL-2011-DPxS XEVL-2021-YPxS XEVL-2021-DPxS	XECL-2013-YPxS XEBL-16EU-YPxS XEBL-16EU-DPxS
XHC003 UNOX. Pure XHC004 refill	1 piece	2 parallel pieces + KEL1115A (Tee attachment JG 8 mm)	

Water treatment for the STEAM circuit

Each appliance is equipped with two attachments for treating the water to be used for producing steam. UNOX provides two water treatment kits:

- 16 **UNOX.Pure** (water filtering system).
- 19 **UNOX.Pure-RO** (reverse osmosis system).

UNOX.Pure

The **UNOX.Pure** filter reduces carbonate hardness, preventing limescale from depositing in the appliance. It also serves as a binding agent for the heavy metal ions such as lead and copper, reducing organic impurities, the chlorine concentrate and clouding. There are four filtering stages:

There are four filtering stages:

- 1 pre-filtration;
- 2 reducing carbonate hardness;
- 3 carbon filtering;
- 4 end of filtration.

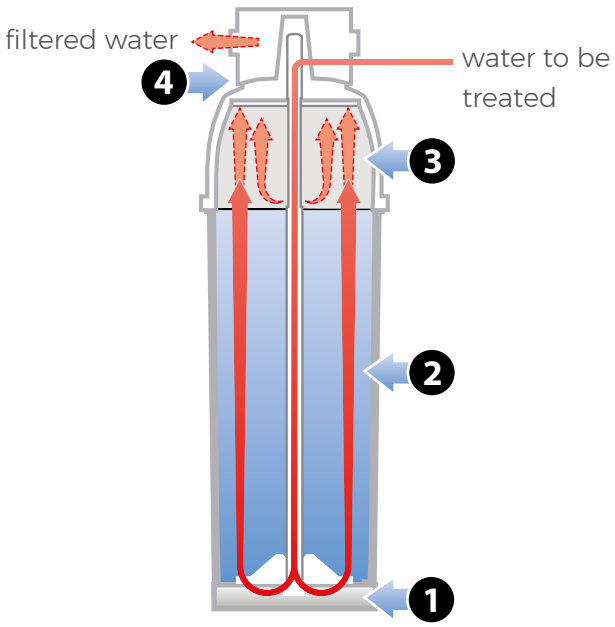

TAB. 15. TECHNICAL DATA - UNOX.PURE XHC004

Filter cartridge size L x D x H mm	Width	149 mm
	Depth	149 mm
	Height	545 mm
Filter system size (1) L x D x H mm	Width	149 mm
	Depth	149 mm
	Height	555 mm
Installation kit dimension L x D x H mm	Width	149 mm
	Depth	151 mm
	Height	555 mm
Weight	Wet filter	7.1 kg
	Dry filter	4.6 kg
Water temperature	Min.	5°C
	Max.	40°C
Room temperature	Min.	5°C
	Max.	35°C
Storage temperature	Min.	5°C
	Max.	35°C
Water inlet pressure	Min.	150 kPa
	Max.	600 kPa
Duration at 10 °dH (2)		4250 litres or 12 months
Operating position	Vertical, horizontal and above the head	

(1) The filtering system includes 1 filter cartridge with 1 filter head
(2) Carbonate hardness is expressed in German degrees, dH 1 dH = 1.78 f = 17.8 ppm

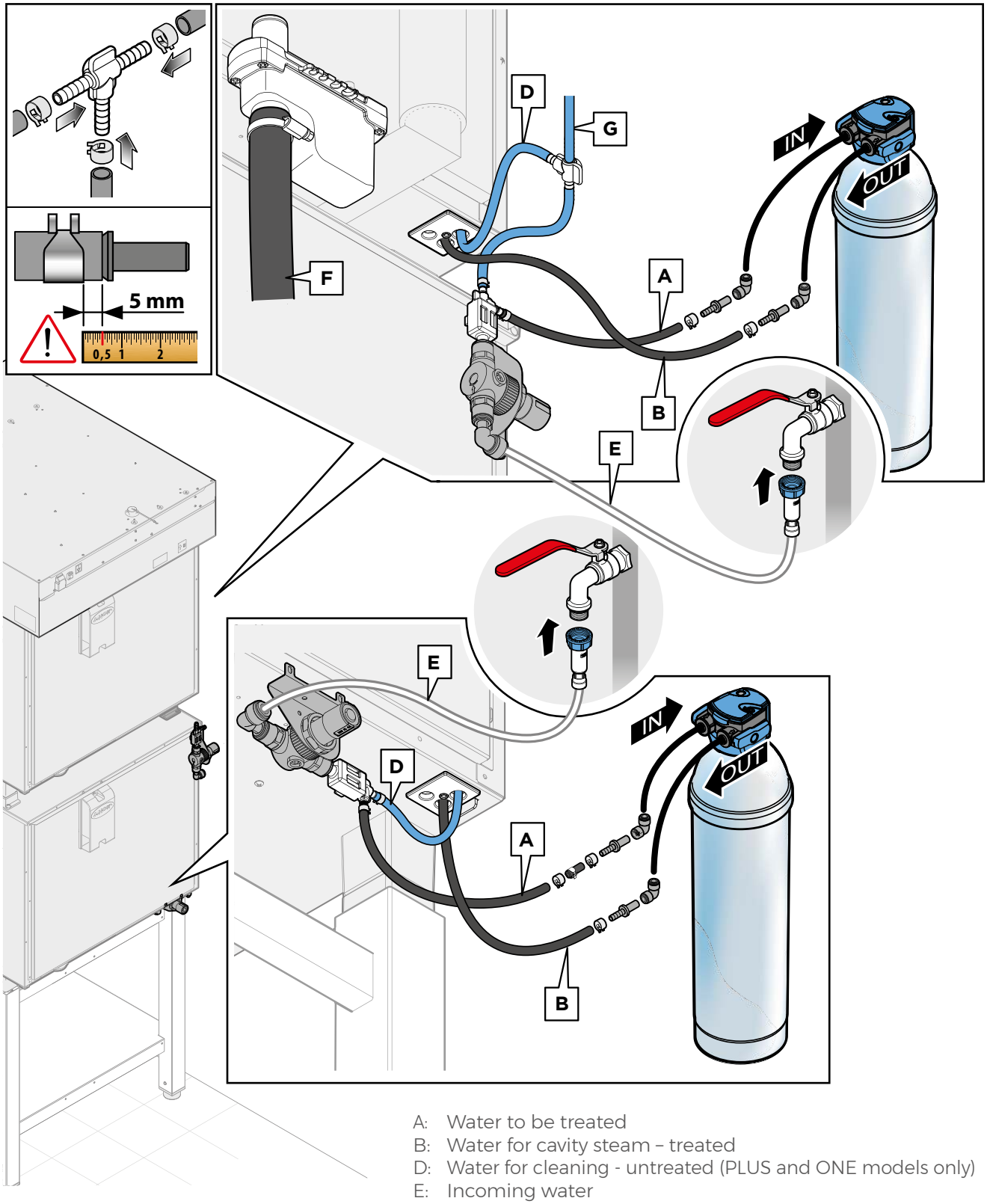

A: Water to be treated
B: Water for cavity steam – treated
D: Water for cleaning - untreated (PLUS and ONE models only)
E: Incoming water
F: Appliance drain
G: Water for HOOD cleaning (PLUS and ONE models only)

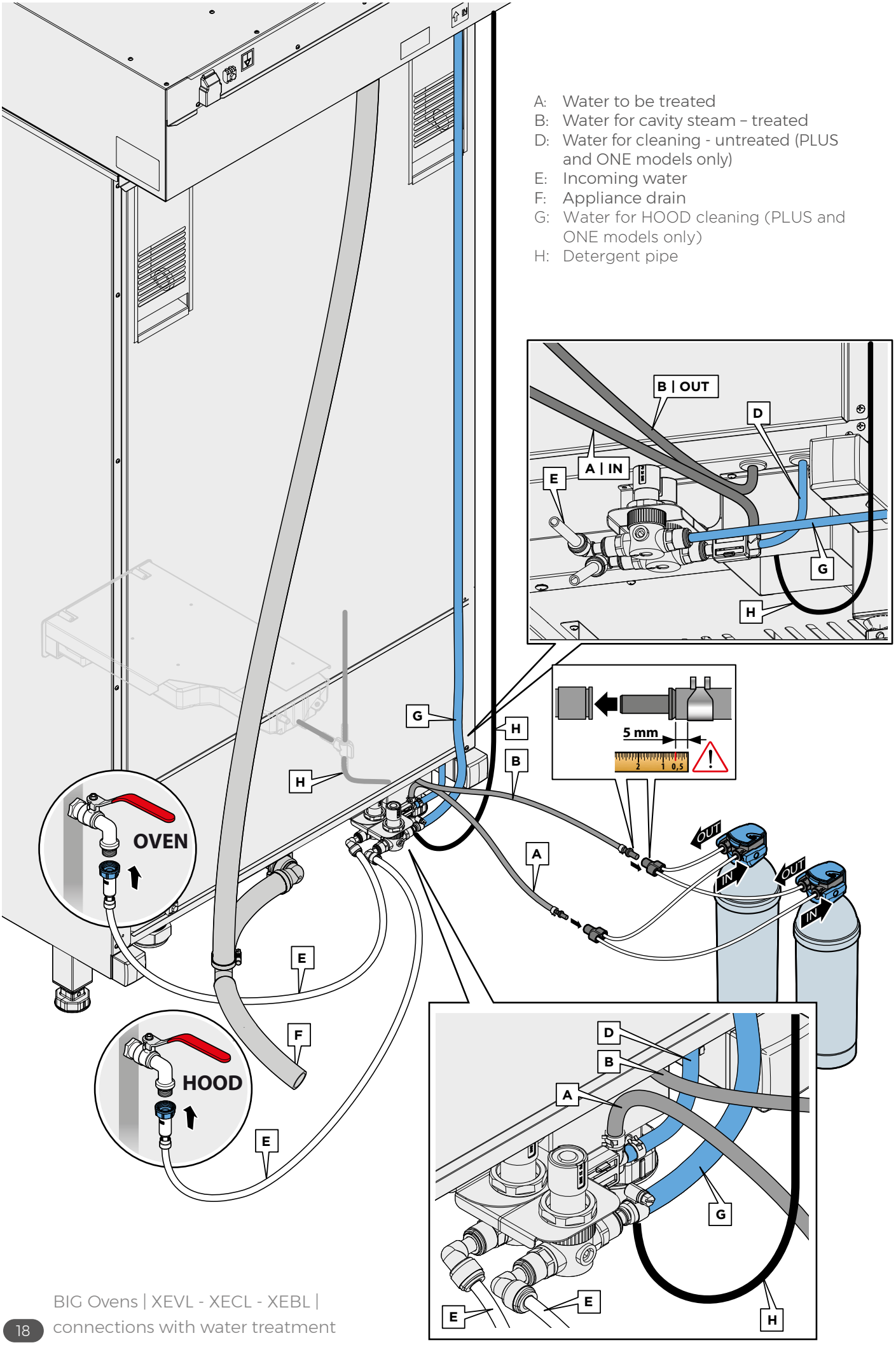
A: Water to be treated
B: Water for cavity steam – treated
D: Water for cleaning - untreated (PLUS and ONE models only)
E: Incoming water
F: Appliance drain
G: Water for HOOD cleaning (PLUS and ONE models only)
H: Detergent pipe
B | OUT
D
A | IN
E
G
H
5 mm
OVEN
HOOD
OUT
IN
A
B
F

UNOX.Pure-RO

The **UNOX.Pure-RO** prevents the formation of limescale and corrosion, reducing the amount of salts, such as carbonates, phosphates and nitrates. It can remove all particles (ions and molecules) exceeding 0.001 µm.

It consists of three filters:

- 1 1 active carbon mechanical filter;
- 2 1 polymeric membrane;

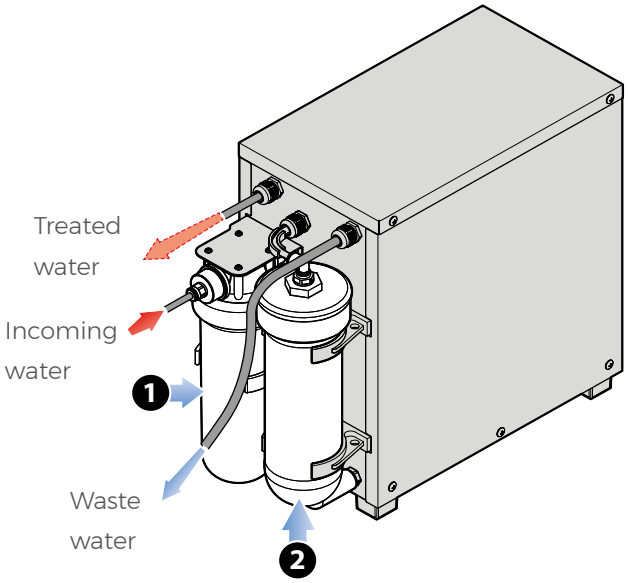

TAB. 16. TECHNICAL DATA - UNOX.PURE-RO

Size	W x D x H	235 x 550 x 450 mm
Weight	Gross	25
	net	20
Electrical data	Power	220-240V 1PH+N 50/60Hz
		230 W
	H07RN-F Electric cable	Schuko plug not supplied
		10°C
		40°C
Water temperature.		10°C min - 40°C max
Room temperature		150 - 600 kPa
Water inlet pressure	Min.	30000 l
	Max.	vertical
Duration at 10 °dH (1)		25000 l
Operating position		vertical

(1) The carbonate hardness is expressed in German degrees, dH 1 dH = 1.78 f = 17.8 ppm

A: Water to be treated
B: Water for cavity steam – treated
C: Connection to the detergent tank (PLUS and ONE models only)
D: Water for cleaning - untreated (PLUS and ONE models only)
E: Incoming water
F2: UNOX.Pure-RO drain

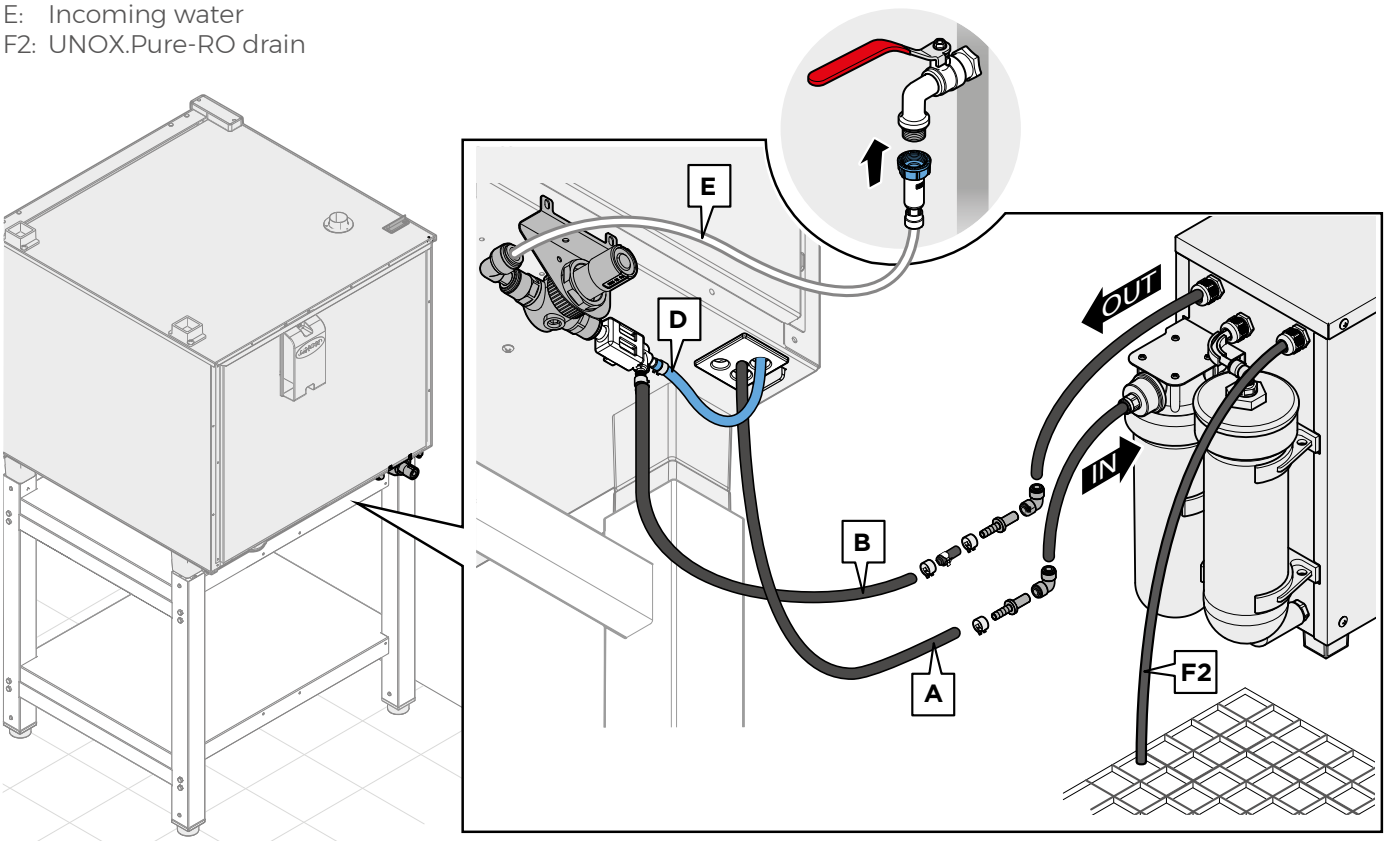

19

Example of plumbing in **MAXI.Link** columns

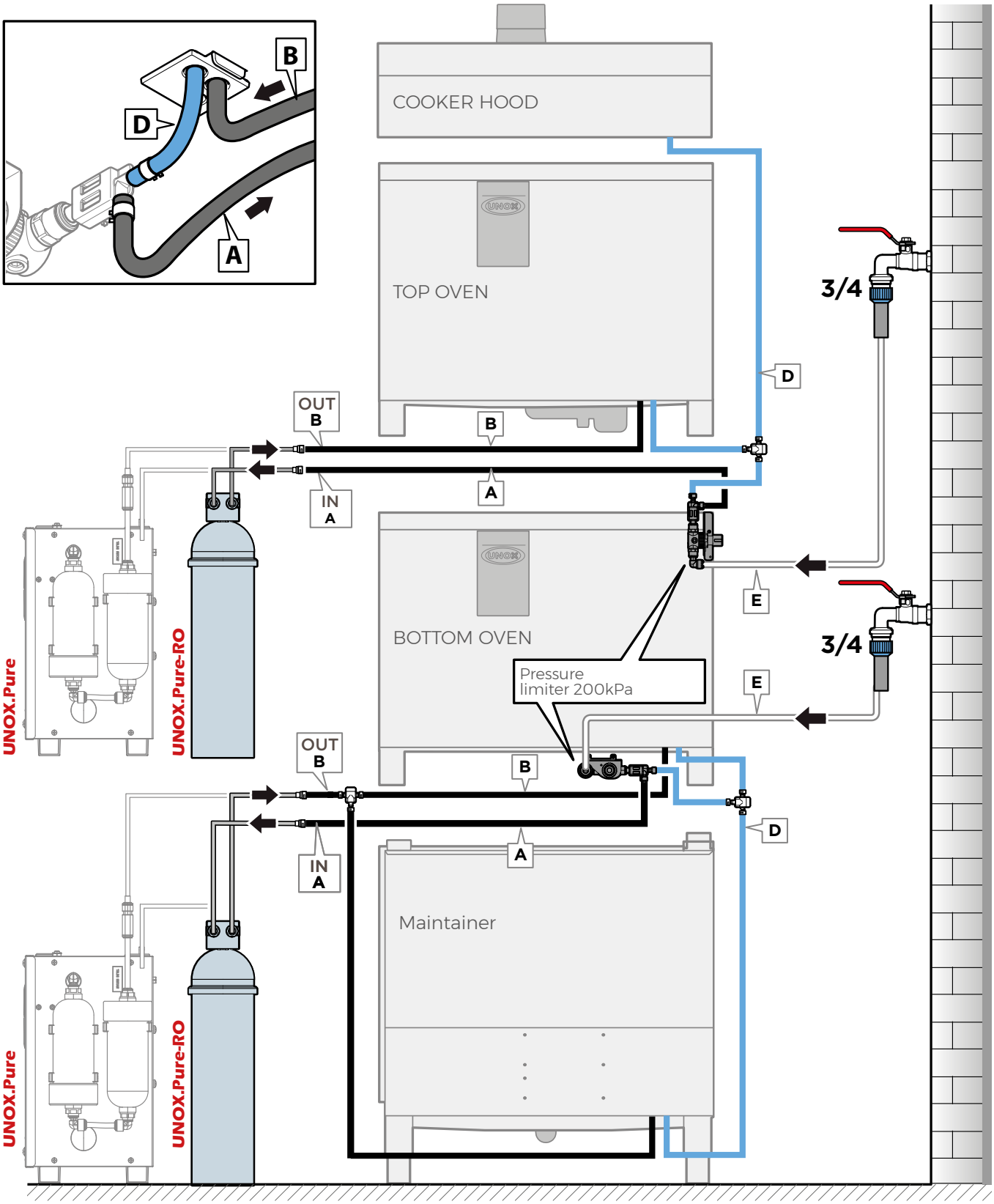

A: Water to be treated
B: Water for cavity steam – treated
D: Water for cleaning - untreated (PLUS and ONE models only)
E: Incoming water
F: Appliance drain
G: Water for HOOD cleaning (PLUS and ONE models only)

Example of plumbing in **MAXI.Link** columns

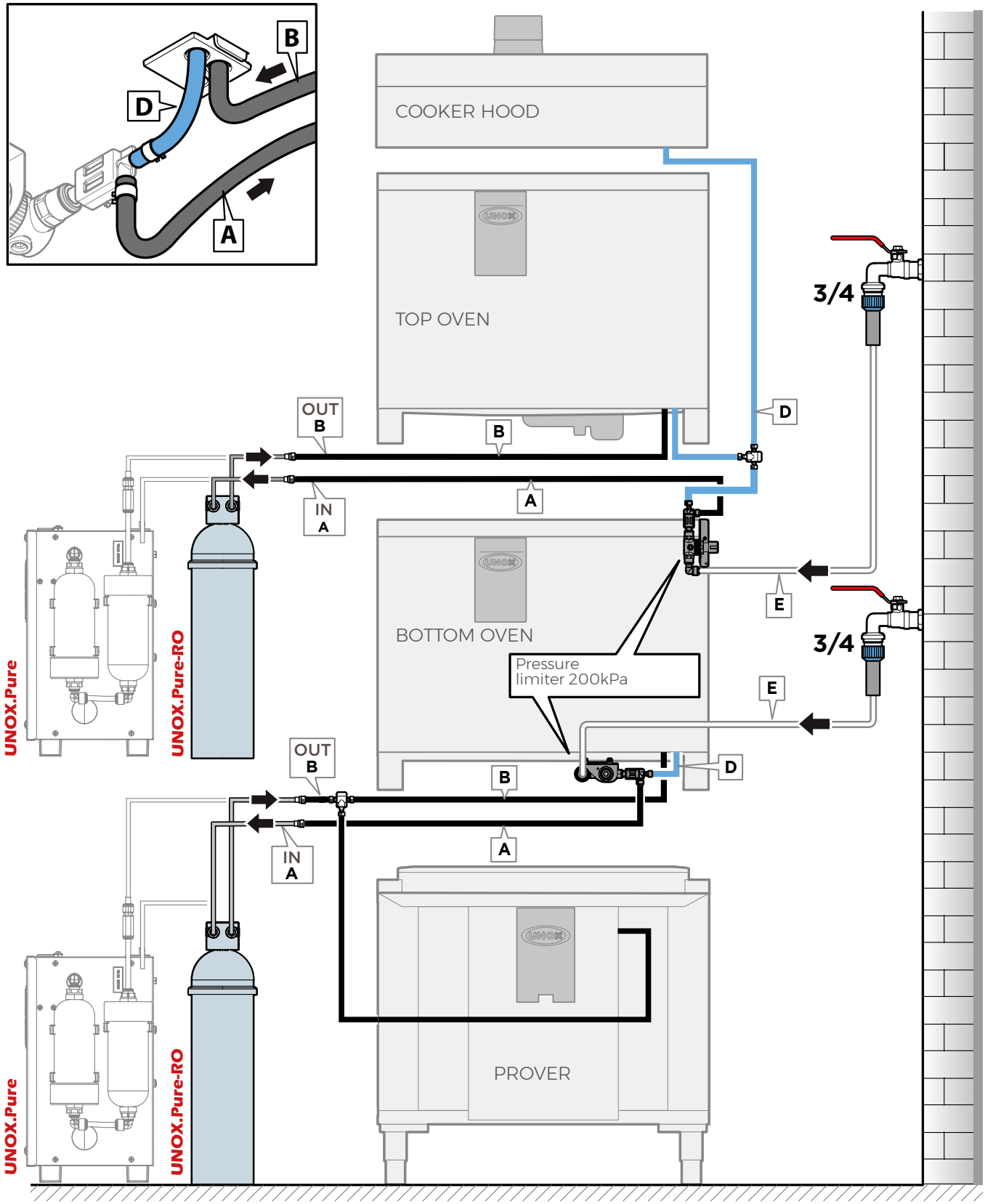

A: Water to be treated
B: Water for cavity steam – treated
D: Water for cleaning - untreated (PLUS and ONE models only)
E: Incoming water
F: Appliance drain
G: Water for HOOD cleaning (PLUS and ONE models only)

Example of plumbing in **MAXI.Link** columns

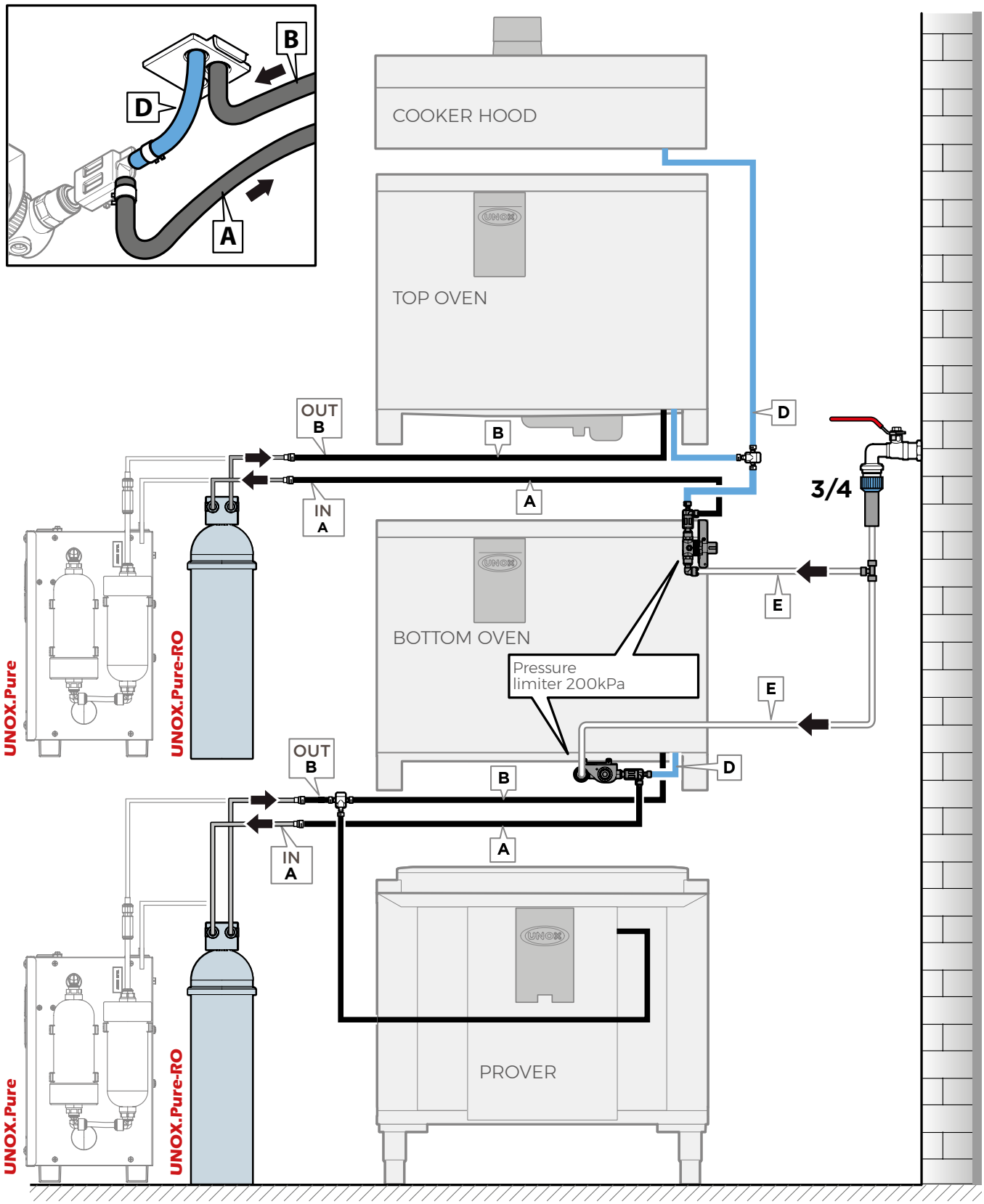

A: Water to be treated
B: Water for cavity steam – treated
D: Water for cleaning - untreated (PLUS and ONE models only)
E: Incoming water
F: Appliance drain
G: Water for HOOD cleaning (PLUS and ONE models only)

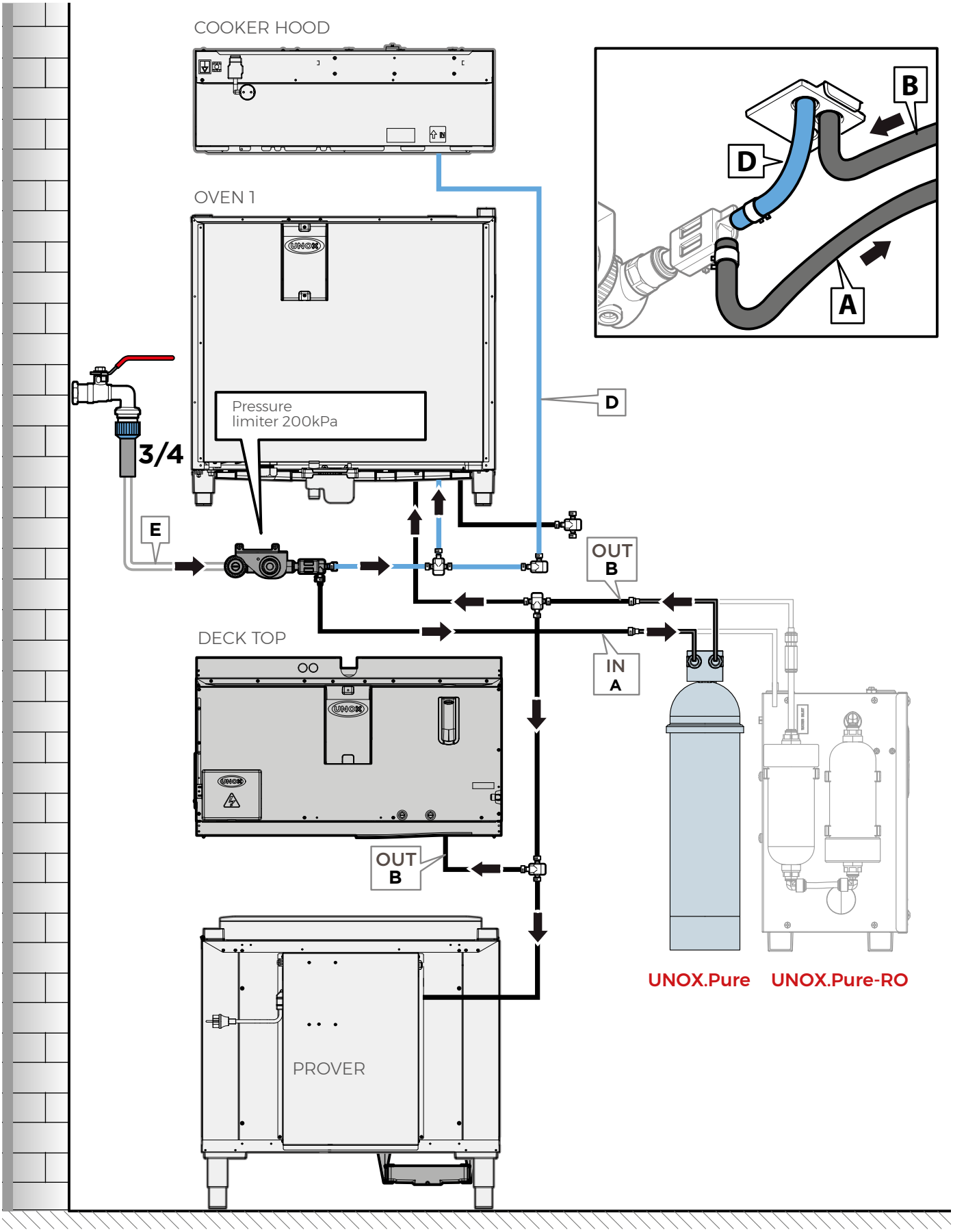

A: Water to be treated
B: Water for cavity steam – treated
D: Water for cleaning - untreated (PLUS and ONE models only)
E: Incoming water
F: Appliance drain
G: Water for HOOD cleaning (PLUS and ONE models only)

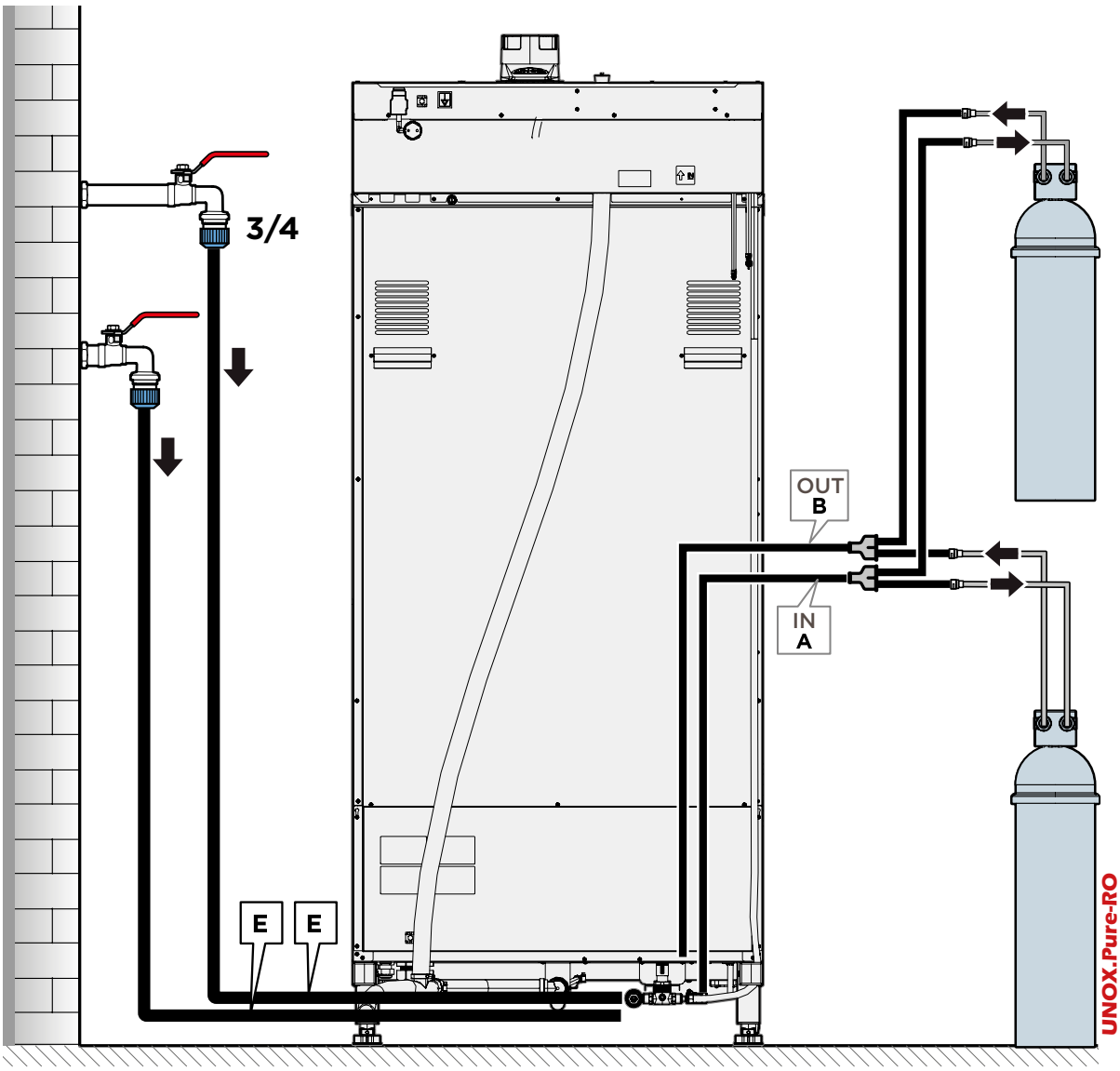

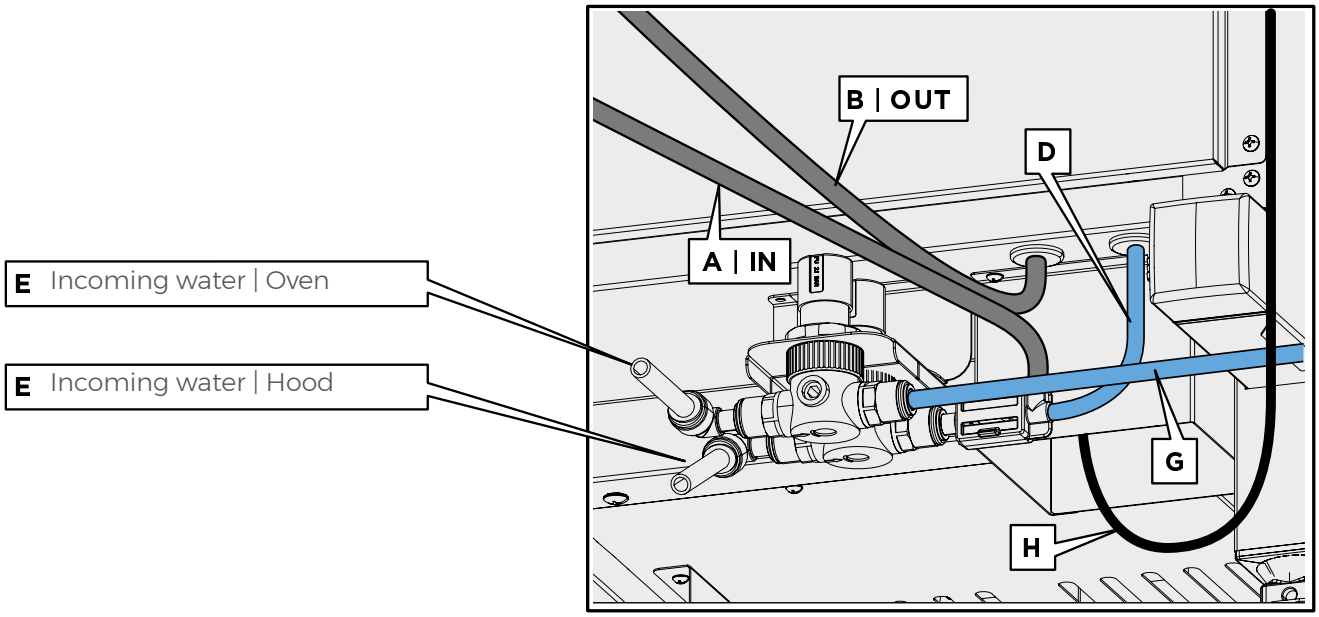

A: Water to be treated
B: Water for cavity steam – treated
D: Water for cleaning - untreated (PLUS and ONE models only)
E: Incoming water
F: Appliance drain
G: Water for HOOD cleaning (PLUS and ONE models only)

Water drain connection

The water drain is located:

- on the back of BIG XEVL, BIG COMPACT XECL, BIG XEBL ovens 20.
- on the bottom of XEVC, XECC, XEBC ovens 21.

The water drain connection must include:

- a syphon (only supplied with the free-standing ovens);
- an outlet pipe measuring between 0.3 m and 1 m in length (not supplied) to be installed at a 4% uniform incline.

The appliances are fitted with a supply pipe with a diameter of 30 mm.

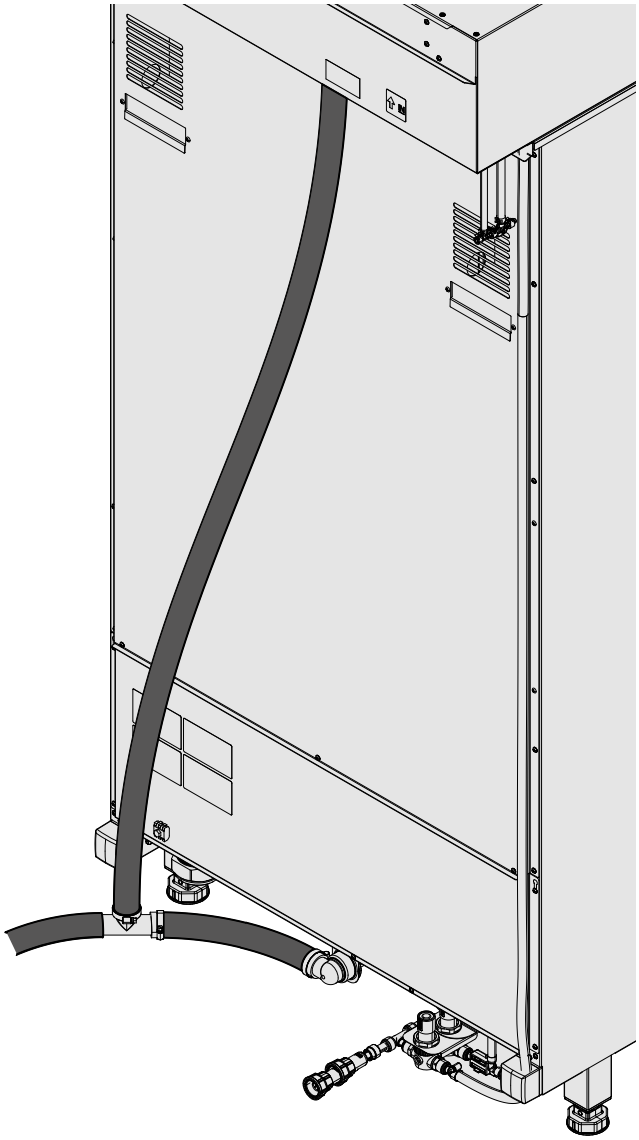

20

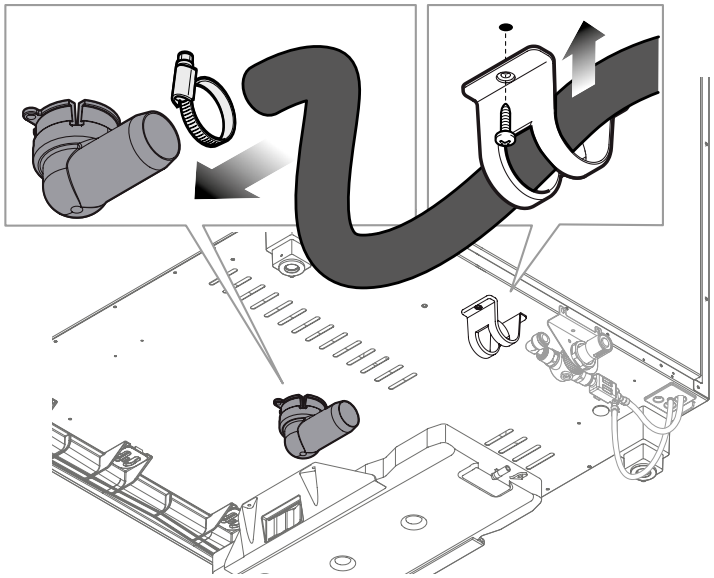

21

22 If you cook large amounts of greasy foods (e.g. poultry), do not use the syphon and add a grease separator or drain directly into the grate. Keep the indicated air gap in both cases.

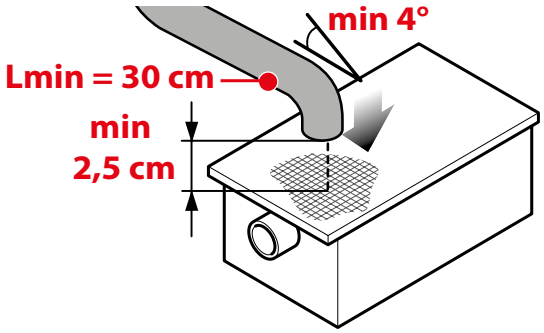

22

A connection kit for the **XUC001** appliance is available as an optional accessory for both countertop and free-standing ovens. It contains:

- a 2.5 m EPDM rubber water pipe
- 4 x steel clamps
- 1 x syphon
- 1 x 90° connector.

Countertop ovens feature an adjustable water drain: five positions are available for fixing the outlet pipe of the electric ovens ▶ 23 and three positions for the gas version. The length of the outlet pipe must be modified by the technician based on the position of the drain.

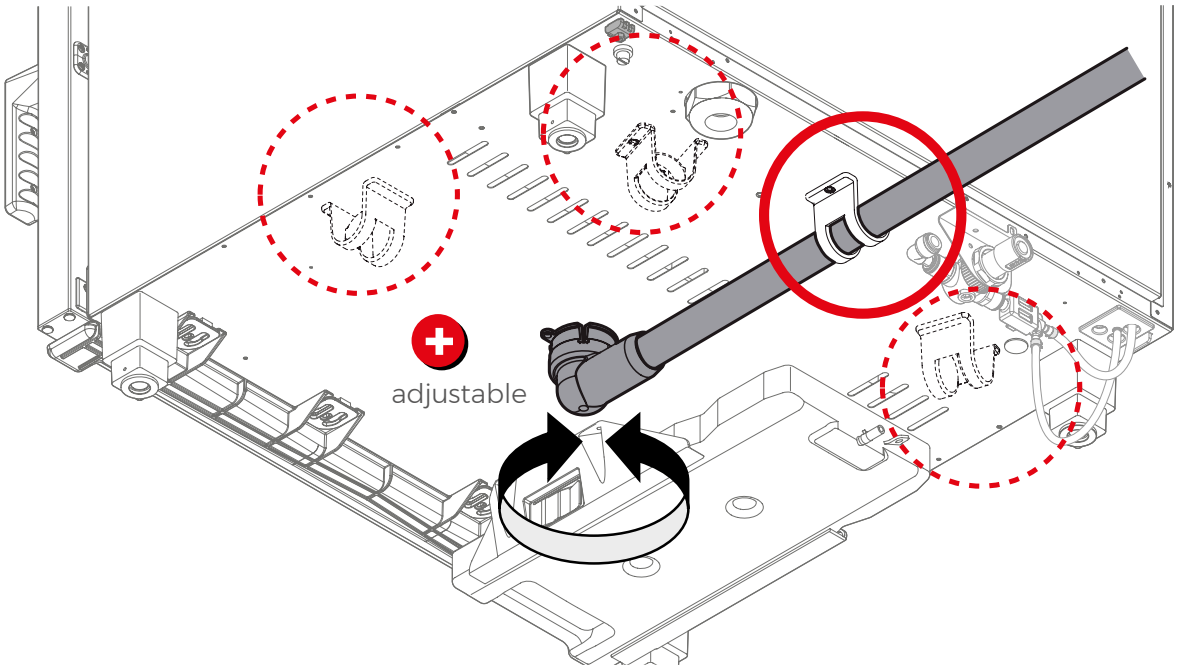

23

Figure ▶ 24 shows the **XUC001** water drain connection kit installed in countertop ovens (electric ovens). On the left, the XUC001 kit is installed without the syphon.

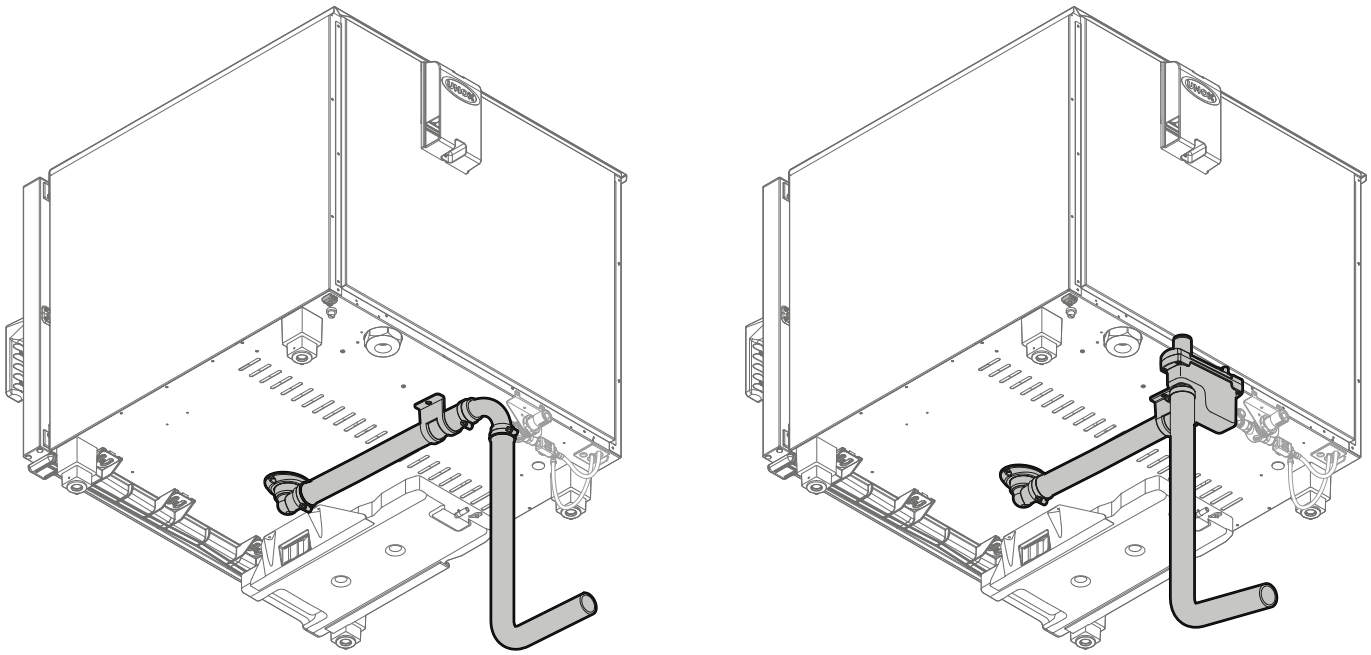

24

WATER DRAIN CONNECTION

Wall drain	Separate drain with funnel	Floor drain

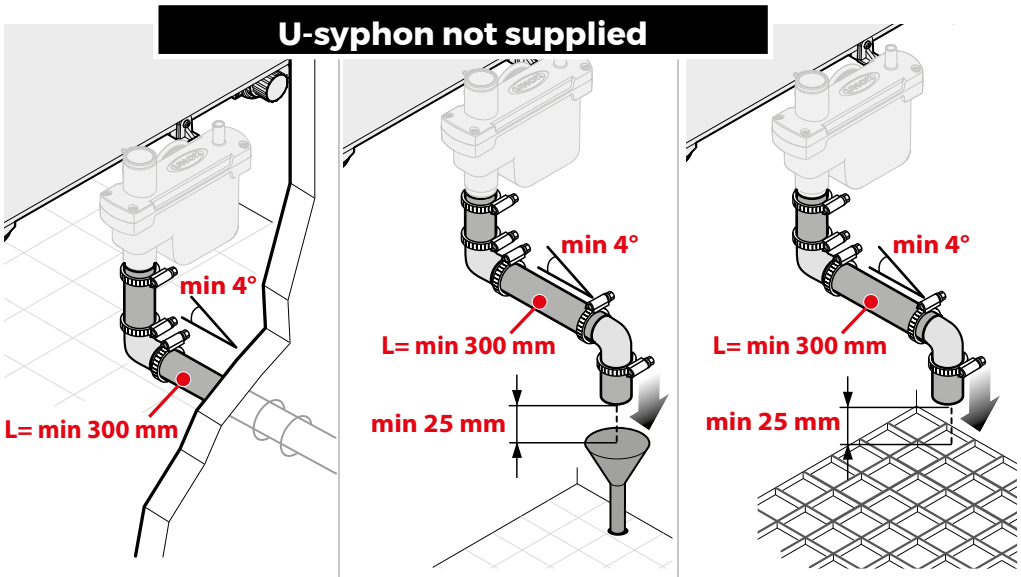

XEVC | XECC | XEBC single oven

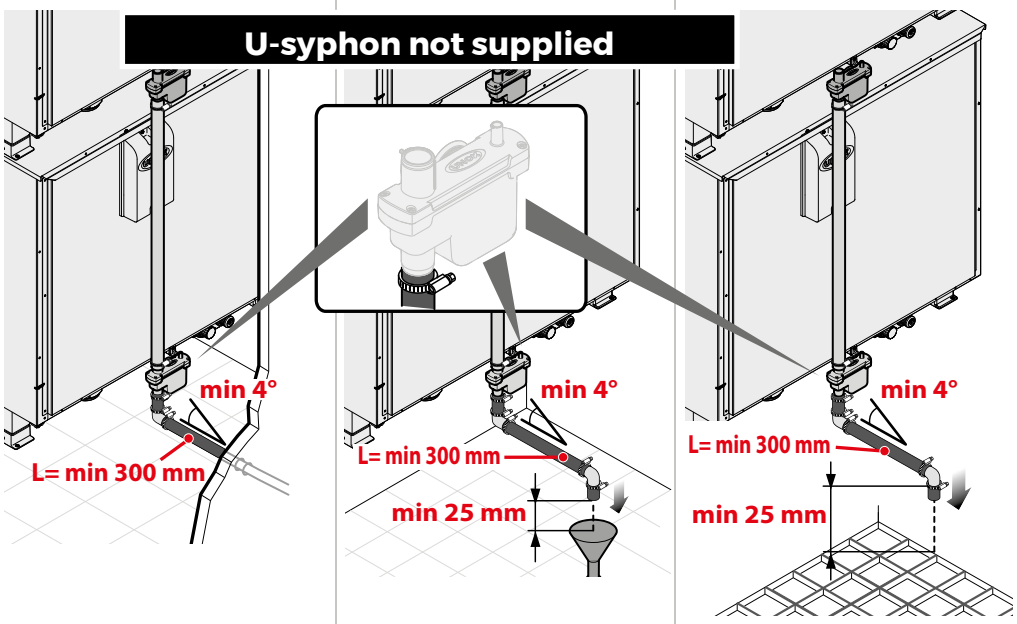

XEVC | XECC | XEBC multiple ovens column installations

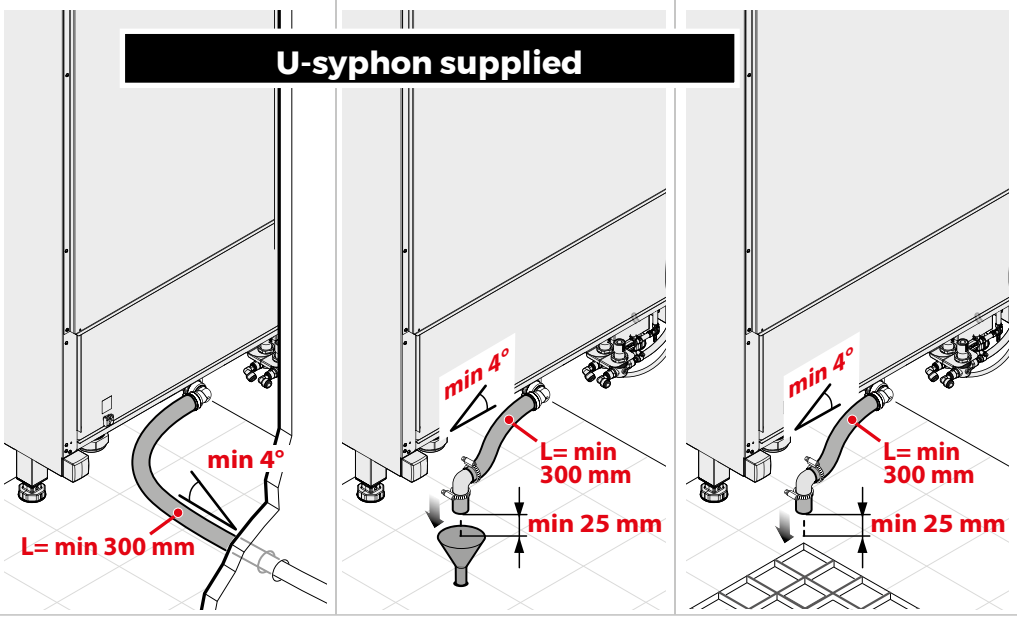

BIG XEVL | BIG COMPACT XECL | XEBL ovens

The grate drain must maintain an air gap of at least 25 mm.

ROTOR.KLEAN™ – INTEGRATED AUTOMATIC WASHING SYSTEM (PLUS and ONE models only)

Rotor.KLEAN™ is a washing technology developed by UNOX to optimise washing times and the consumption of water and detergent. It consists of:

- 26 plastic rotors with two nozzles;
- a detergent pump;
- **UNOX.Det&Rinse PLUS** and relative connection (see section **DETERGENT CONNECTIONS (PLUS AND ONE MODELS ONLY)**

The **Rotor.KLEAN™** system features various washing programs, which allow users to select the washing cycle that best suits their requirements.
Washing programs are the following:

- HOOD WASHING
- LONG WASHING
- MED WASHING
- SHORT WASHING
- QUICK WASHING

Data on water and detergent consumption specified in **TAB. 17. SPECIFIC WASH PROGRAMS** refer to countertop **CHEFTOP-BAKERTOP MIND.Maps™** ovens.
Free-standing **CHEFTOP-BAKERTOP MIND.Maps™** ovens feature two different rotors. Therefore consumption data will be doubled.
The incoming water pressure must be at least equal to 150 kPa. If the pressure of the incoming water is below 150 kPa, you must install a pump (minimum flow rate: 300 l/h).

TAB. 17. SPECIFIC WASH PROGRAMS

TYPE OF WASH SYSTEM	TYPE OF WASH	WATER CONSUMPTION [l]	DETERGENT CONSUMPTION [l]	DURATION [min]
PLUS 1G	LONG	34.50	0.3525	115
	MEDIUM	19.34	0.1775	67
	SHORT	18.36	0.0875	52
	QUICK	17.63	0.045	41
PLUS 2G 3M	LONG	76.63	0.435	135
	MEDIUM	42.78	0.2175	78
	SHORT	29.36	0.10875	60
	QUICK	28.60	0.06625	54
PLUS 3G 3M	LONG	84.02	0.435	135
	MEDIUM	46.84	0.2175	78
	SHORT	31.91	0.10875	60
	QUICK	31.07	0.06625	54
PLUS 2G 5M / BIG 2G	LONG	77.12	0.5	136
	MEDIUM	43.02	0.25	78
	SHORT	29.49	0.125	61
	QUICK	28.72	0.825	54
PLUS 3G 5M / BIG 3G	LONG	84.51	0.5	136
	MEDIUM	47.08	0.25	78
	SHORT	32.03	0.125	61
	QUICK	31.19	0.825	54
ONE 1G	LONG	31,6	0,33	100
	MEDIUM	20,8	0,17	60
	SHORT	15,5	0,08	40
	QUICK	15,4	0,04	34
	SUPERQUICK	11,7	0,04	18
	RINSE	10,3	0,00	6
BIG ONE 2G	LONG	61,2	0,83	121
	MEDIUM	39,5	0,42	70
	SHORT	28,6	0,21	45
	QUICK	28,3	0,11	34
	SUPERQUICK	21,0	0,11	20
	RINSE	10,3	0,00	6

Chemical/physical characteristics of incoming water | Wash circuit (PLUS and ONE only)

see page 35

Detergent connections (PLUS and ONE models only)

The ovens are equipped with a tank, which can be filled with detergent to wash the appliance automatically.
To optimise the **Rotor.KLEAN™** performance, UNOX has developed **UNOX.Det&Rinse PLUS** and **ULTRA**, a cleaning product that combines the detergent and rinse agent actions. It is supplied in 1-litre tanks.
Appliances come with:

- a 2 m hose;
- a detergent tank cap already assembled;
- a detergent filter.

Only fill with the 1-litre bottles of the **UNOX. Det&Rinse PLUS** or **ULTRA** detergent.
To refill the detergent:

- Wear gloves to prevent your hands from coming into direct contact with the detergent.
- Pull out the tank from under the oven until you hear a "click".
- Open the lid of the tank.
- Open the cap of the UNOX 1-litre detergent bottle **without removing/piercing the protective film.**
- Turn the bottle upside down and screw it on the tank (by screwing the bottle, a pin in the tank breaks the protective film, which allows the detergent to come out).
- Once the bottle is empty, unscrew it to remove it. Avoid dripping.
- **The detergent must not come into contact with the skin, eyes or mucous membranes.** In case of contact with the detergent, follow the instructions on the safety data sheet.
- Repeat the process up to the maximum level allowed, indicated on the front of the tank. (Maximum capacity of the 4 litre tank = 4 bottles).
- Remove the bottle.
- Reposition the tank under the oven until it stops.
- Dispose of the gloves, taking care not to touch the areas spoiled with detergent.

Never touch the detergent with bare hands.
DO NOT TAMPER WITH THE TANK AND ITS CONNECTIONS TO THE OVEN FOR ANY REASON AS THIS COULD CAUSE A RISK OF INJURY OR DEATH.

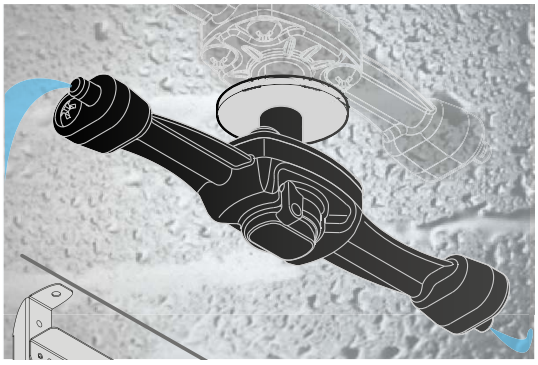

26

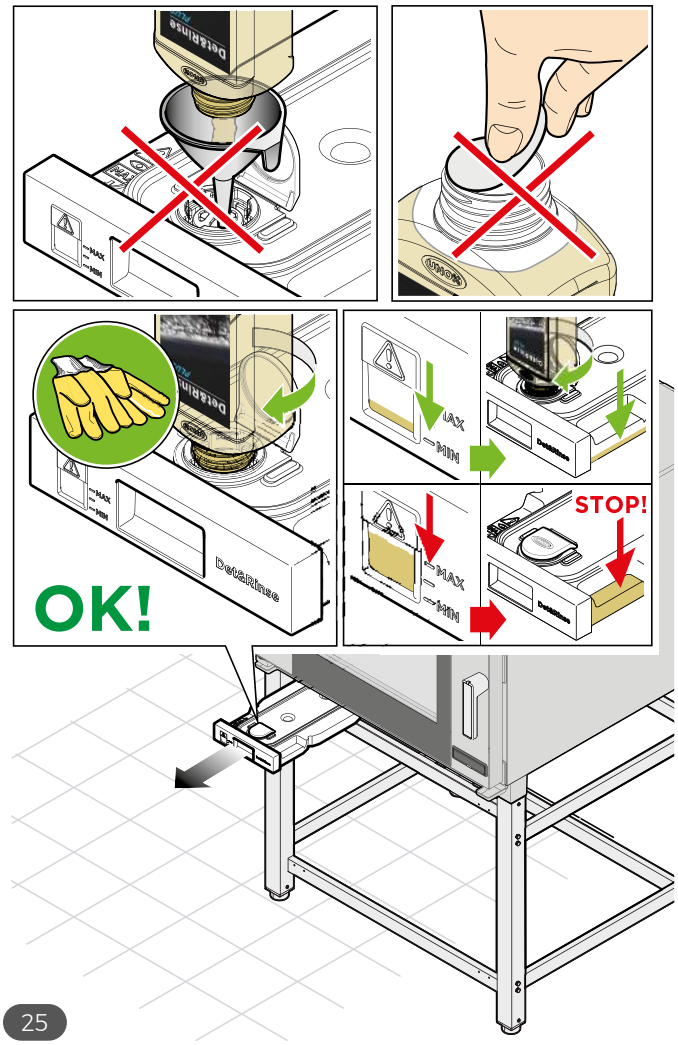

25

MAXI.LINK

27 The **MAXI.Link** system allows users to control different combinations of ovens and accessories via a single control panel. Thanks to this technology, the user is able to manage a wide range of foods requiring different cooking and baking techniques, significantly reducing the overall dimensions of the cooking system.
MAXI.Link allows users to create a cooking unit made up of:

- 1 oven;
- lievox prover, slowtop, neutral cabinet
- 1 hood;

The units can be connected together or to accessories (prover or hood) using a stacking kit containing:

- 1 stacking foot and clip
- 1 front metal panel
- the RJ45 cable for connecting the circuit board
- all the water and detergent tank connections 28.

There are various stacking kits available to connect two ovens (see **TAB. 18.** ▶ **STACKING KIT**).

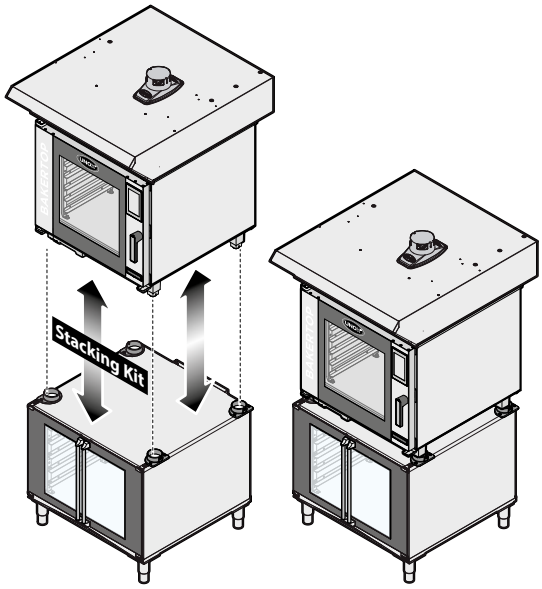

27

TAB. 18. ▶ STACKING KIT

	Type of tray	Stacking kit	Notes
CHEFTOP Compact™	GN 2/3	XECQC-0023-E	Only for electric ovens
	GN 1/1	XECQC-0013-E	
CHEFTOP MIND.Maps™	GN 1/1	XEVQC-0011-E	
	GN 2/1	XEAQC-00E2-E	
	GN 1/1	XEVQC-0011-G	Only for columns with gas oven below and XEVC-0511-* gas or electric oven above.
	GN 1/1	XEVQC-0711-G	Only for columns with gas oven below and XEVC-0711-* gas or electric oven above.
	GN 2/1	XEAQC-00E2-G	Only for gas ovens
BAKERTOP MIND.Maps™	600 x 400	XEAQC-00E2-E	Only for electric ovens
	600 x 400	XEAQC-00E2-G	Only for gas ovens

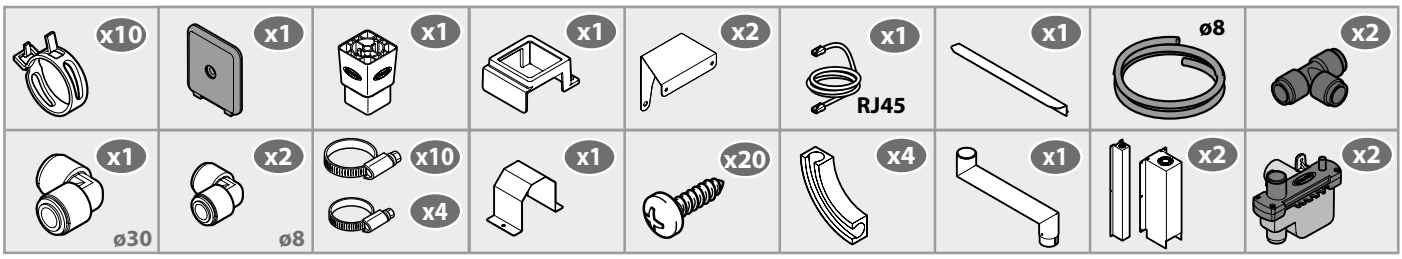

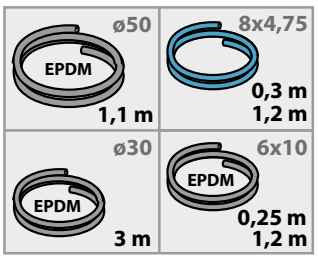

28

29 The figure shows a few combinations of ovens and accessories using the **MAXI.Link** system.
For all possible combinations, please refer to the UNOX "Designer Book Connection Diagrams" manual.

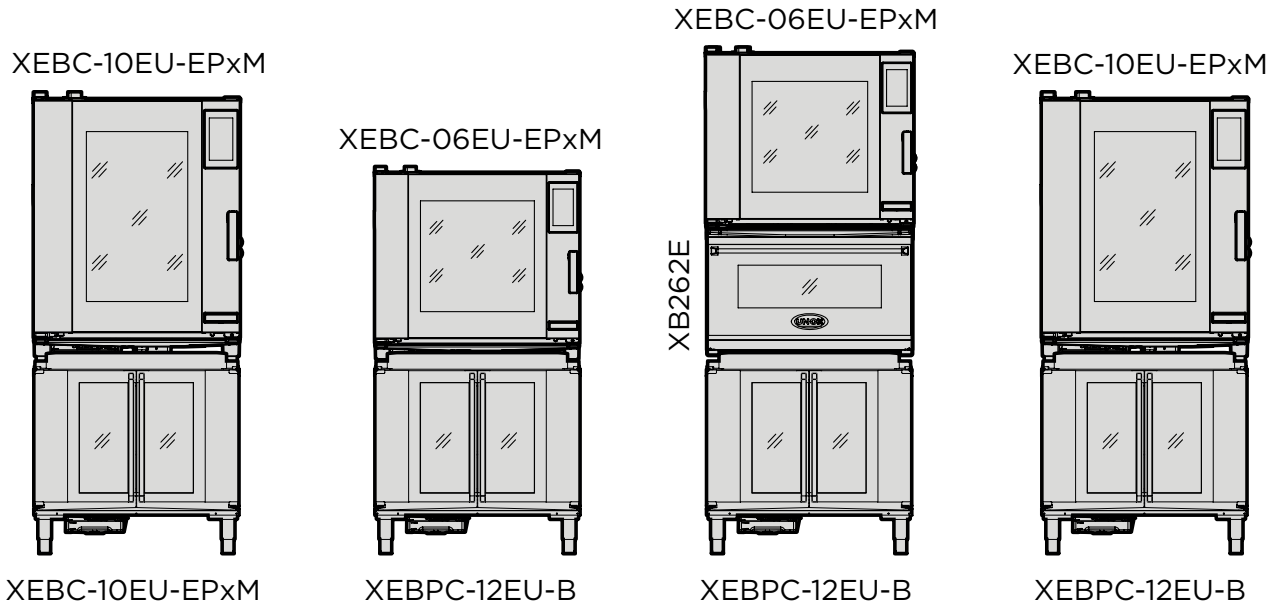

29

UNOX.LINK

You can easily install optional kits that can help you control and monitor the oven.

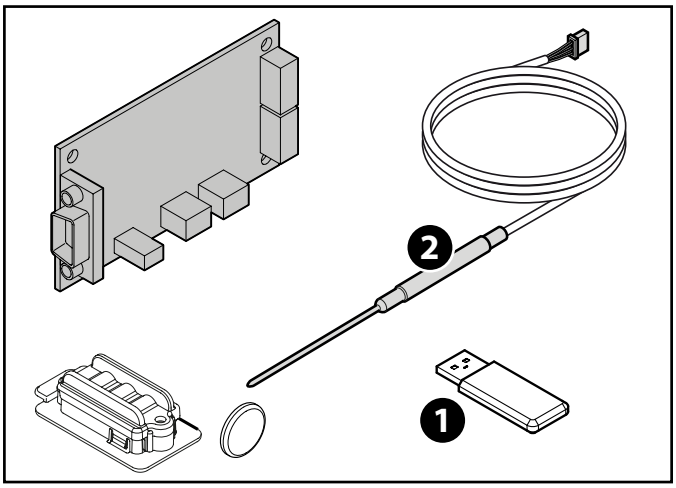

1. USB flash drive
2. SOUS-VIDE **probe** (vacuum probe).

TAB. 19. UNOX LINK

Code	
XEC001	UNOX.link LAN (**CHEFTOP-BAKERTOP MIND.Maps™ONE**)
XEC002	UNOX.Link WIFI (**CHEFTOP-BAKERTOP MIND.Maps™ ONE**)
XEC003	UNOX.Link (**CHEFTOP-BAKERTOP MIND.Maps™ ONE**)
XEC007	UNOX.Link (**CHEFTOP-BAKERTOP MIND.Maps™ PLUS**)
XEC004	UNOX.Link + **SOUS-VIDE probe** (**CHEFTOP-BAKERTOP MIND.Maps™ ONE/PLUS**)

SMART.DRAIN

We recommend using the SMART.Drain system for cooking poultry. The system enables optimal management of the grease produced during cooking. Thanks to this system, cooking times, food shrinkage and the build-up of dirt in the oven cavity can all be reduced.

30 The cooking installation includes a **CHEFTOP-BAKERTOP MIND.Maps™** countertop oven together with a SMART.Drain (XUC020), installed on a tall stand or neutral cabinet.
A message on the oven display indicates that the grease should be conveyed manually into the special hermetic connection tank via a shut-off valve.

UNOX has developed two special grills to cook poultry:

31 **Pollo** consists of):

- 8 welded cones to support the poultry and optimise the flow of air into and out of each piece of poultry;
- a tray with a central drain hole to collect the grease.

32 **Pollo.Grill** consists of a flat grill with a tray to collect grease.
UNOX can also provide two different accessories to cook poultry:

- a tray holder basket to be placed in the cooking cavity;
- a tray holder trolley for the subsequent transport of cooked poultry to the serving counter.

code XWARC-00EF-H -> 400x600 trays
code XWVRC-0011-H -> GN1/1 trays
code XWVRC-0021-H -> GN2/1 trays

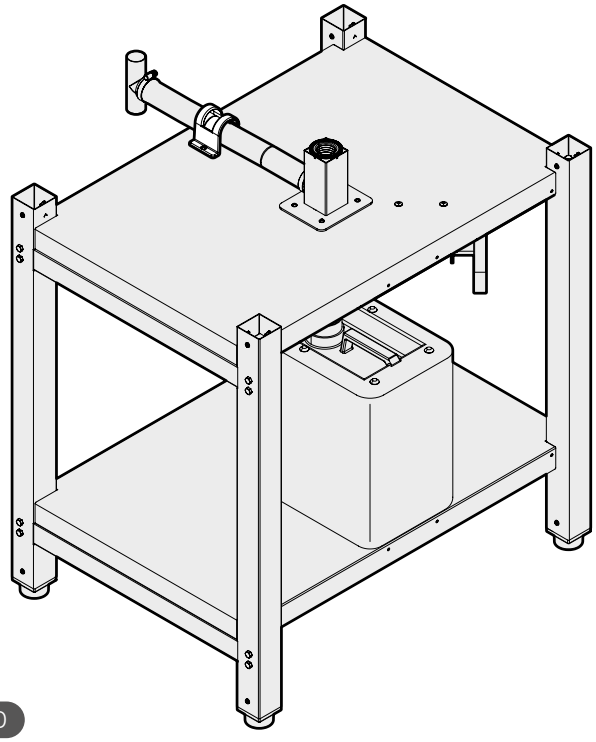

30

There are two different kits to hook the trolley to the oven: XWVYC-CK11 for GN1/1 ovens and XWVYC-CK21 for GN2/1 ovens. These coupling kits allow the tray-holder basket to be removed easily and safely.

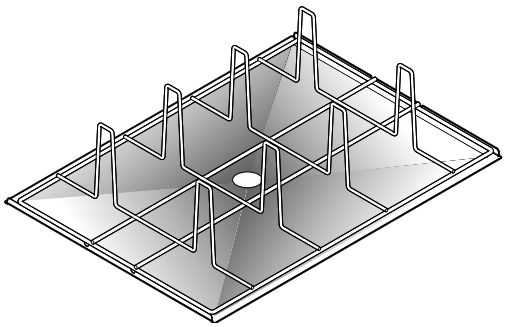

31

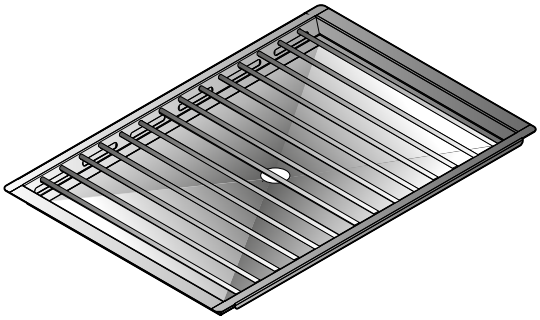

32

TAB. 20. STAND TECHNICAL DATA

Stand model	Width	Length	Height	Net	Height class	Type of tray	Tray kit	Pollo kit
	mm	mm	mm	kg				
XWARC-07EF-UH	842	713	888	35.0	Ultra-High	600 x 400	Included	XUC020
XWVRC-0711-UH	732	546		23.0	Ultra-High	GN 1/1	Included	
XWARC-07EF-H	842	713	752	33.0	High	600 x 400	Included	XUC020
XWVRC-0711-H	732	546		17.1	High	GN 1/1	Included	
XWVRC-0721-H	842	891		24.5	High	GN 2/1	Included	
XWCRC-0613-H	518	779	744	24.0	High	GN 1/1	Included	
XWCRC-0623-H	518	585		25.0	High	GN 2/3	Included	
XWVRC-0011-F	732	546		3.0	Floor	GN 1/1		
XWVRC-0011-M	732	546		9.5	Mid	GN 1/1		
XWVRC-0011-L	732	546		5.0	Low	GN 1/1		
XWARC-00EF-F	842	713	113	3.5	Floor	600 x 400		
XWARC-00EF-M	842	713	462	12.0	Mid	600 x 400		
XWARC-00EF-L	842	713	305	5.5	Low	600 x 400		
XWVRC-0021-F	842	864		4.5	Floor	GN 2/1		
XWVRC-0021-M	842	864		13.0	Mid	GN 2/1		
XWVRC-0021-L	842	864		6.0	Low	GN 2/1		

TAB. 21. CABINET TECHNICAL DATA

Cabinet model	Width	Length	Height	Net		Type of tray	number of trays	Pollo kit
	mm	mm	mm	kg				
XWAEC-08EF	860	901	717	38.5		600x400	8	XUC020
XWVEC-0811	750	717	717	32		GN 1/1	8	XUC020
XWVEC-0821	860	864	717	42		GN 2/1	8	XUC020

There is a Cooking and Baking Essentials solution for every cooking technique: from grilling to frying without oil, browning in a pan to steaming, from baking pizza and other dough products, to full loads of fowl.

BAKERTOP MIND.MAPS™ | BAKING ESSENTIALS

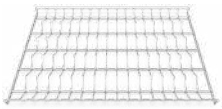

BAGUETTE.GRID
Extra-light chromium plated grid - 5 channels.

Hight	Item
27 mm	**GRP410**

BAKE
Aluminium tray. It can only be ordered in multiples of 2 pieces.

Hight	Item
15 mm	**TG405**

BAKE.BLACK
Non-stick aluminium tray.

Hight	Item
15 mm	**TG460**

BAKE.SILICO
Silicon coated aluminium tray.

Hight	Item
9 mm	**TG416**

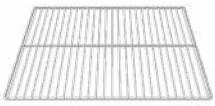

CHROMO.GRID
Flat chromium plated grid

Hight	Item
8 mm	**GRP405**

FAKIRO.GRILL
Non-stick aluminium tray. Two surfaces - flat and ribbed - for different cookings.

Hight	Item
12 mm	**TG465**

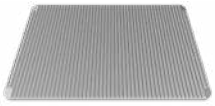

FAKIRO™
Aluminium tray. Two surfaces - flat and ribbed - for different products.

Hight	Item
12 mm	**TG440**

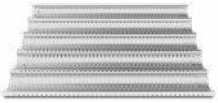

FORO.BAGUETTE
Perforated aluminium tray - 5 channels

Hight	Item
34 mm	**TG445**

FORO.BAGUETTE.BLACK
Non-stick perforated aluminium tray - 5 channels

Hight	Item
34 mm	**TG435**

FORO.BAKE
Perforated aluminium tray. It can only be ordered in multiples of 2 pieces

Height	Item
15 mm	**TG410**

FORO.BLACK
Non-stick perforated aluminium tray. It can only be ordered in multiples of 2 pieces.

Height	Item
15 mm	**TG430**

FORO.SILICO
Silicon coated non-stick perforated aluminium tray.

Height	Item
9 mm	**TG415**

STEEL.BAKE
Stainless steel tray.

Height	Item
20 mm	**TG450**

BAKERTOP MIND.MAPS™ | COOKING ESSENTIALS

POLLO.BAKE
Stainless steel tray with non-stick coating for 10 full chickens. Equipped with grease collector and central drain compatible with SMART.Drain.

Height	Item
164 mm	**GRP430**

POLLO.GRILL
Steel tray equipped with grease collector and central drain, compatible with SMART.Drain.

Height	Item
27 mm	**GRP425**

POLLO.WASH
Stainless steel grill with hooks for trays. Allows the cleaning of 3 POLLO.BLACK trays during the oven's washing cycle.

Height	Item
	GRP440

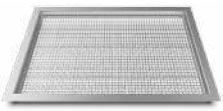

STEAM&FRY
Perforated stainless steel tray for steaming or frying

Height	Item
30 mm	**GRP420**

BAKERTOP MIND.MAPS™ | TRAY HOLDER TROLLEYS

TRAY HOLDER TROLLEY
Multi-functional support for storing and transporting the trays.

Capacity	18 600x400	**Dimensions - w x d x h**	726 x 495 x 1700 mm
Tray pitch	80 mm	**Weight**	15 kg
		Item	**XTB0005**

Capacity	18 600x400	**Dimensions - w x d x h**	526 x 695 x 1700 mm
Tray pitch	80 mm	**Weight**	15 kg
		Item	**XTB0003**

CHEFTOP MIND.MAPS™ | TRAY STARTER PACK

START.COOK
Tray starter kit including: 1 x GRP815, TG936, TG885, TG970, TG895.

Height	Item
	XUC018

CHEFTOP MIND.MAPS™ | COOKING ESSENTIAL

BACON.20
Stainless steel grid with fat-collection tray.

Height	Item
21 mm	**TG840**

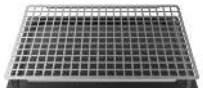

BACON.40
Stainless steel grid with fat-collection tray

Height	Item
41 mm	**TG945**

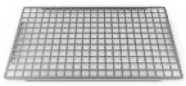

BACON.GRID
Perforated stainless steel tray

Height	Item
13.5 mm	**TG944**

BLACK.20
Non-stick stainless steel tray

Height	Item
20 mm	**TG895**

BLACK.40
Non-stick stainless steel tray

Height	Item
40 mm	**TG900**

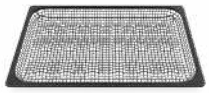

BLACK.FRY
Non-stick stainless steel frying tray.

Height	Item
10 mm	**GRP816**

CHROMO.GRID
Chrome-plated grid with handles for QUICK.LOAD easy oven loading.

Height	Item
40 mm	**GRP970**

CLEAN.FRY
Non-stick perforated stainless-steel frying grid with fat-collection tray.

Height	Item
51.5 mm	**GRP820**

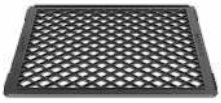

DUO.GRILL
Non-stick aluminium tray with double finish: one side is ribbed and the other has a diamond grid.

Height	Item
12 mm	**TG990**

EGGS 6x2

Non-stick aluminium tray for 6 double-egg portions.

Hight	Item
16 mm	**TG935**

EGGS 8x1

8 single-eggs non-stick aluminium tray

Hight	Item
16 mm	**TG936**

FAKIRO.GRILL

Non-stick aluminium tray. Two cooking surfaces: ribbed for grilling, flat for different types of cooking.

Compatible with	Hight	Item
BIG & COUNTERTOP ovens	12 mm	**TG995**

FAKIRO.GRILL

Non-stick aluminium tray. Two cooking surfaces: flat or ribbed, for different types of cooking. Insert the tray from the shorter side.

Compatible with	Hight	Item
COMPACT GN1/1 ovens	12 mm	**TG995**

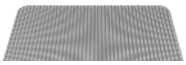

FAKIRO™

Aluminium tray. Two surfaces - flat and ribbed - for different products.

Hight	Item
12 mm	**TG875**

FORO.STEEL20

Perforated stainless steel tray

Hight	Item
20 mm	**TG810**

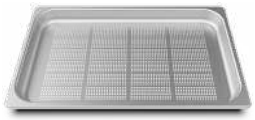

FORO.STEEL40

Perforated stainless steel tray.

Hight	Item
40 mm	**TG820**

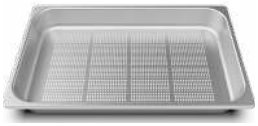

FORO.STEEL65

Perforated stainless steel tray.

Hight	Item
65 mm	

GRILL

Non-stick aluminium grilling tray. Does not require to be preheated before use.

Hight	Item
37 mm	**TG885**

PAN.FRY

Non-stick enamel tray for frying

Hight	Item
20 mm	**TG905**

POLLO.BLACK
Non-stick stainless steel tray for 8 whole chickens. With fat-collection tray and central drain compatible with SMART.Drain.

Hight	Item
167 mm	**GRP825**

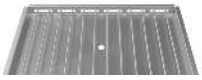

POLLO.GRILL
Steel tray equipped with grease collector and central drain, compatible with SMART.Drain.

Hight	Item
27 mm	**GRP840**

POLLO.WASH
Stainless steel grill with hooks for trays. Allows the cleaning of 3 POLLO.BLACK trays during the oven's washing cycle.

Hight	Item
27 mm	**GRP860**

POTATO.FRY
French Fries frying tray

Hight	Item
40 mm	**GRP817**

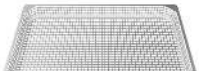

STEAM
Perforated stainless steel steaming tray.

Hight	Item
40 mm	**GRP815**

STEEL.20
Stainless steel tray.

Hight	Item
40 mm	**TG805**

STEEL.40
Stainless steel tray.

Hight	Item
40 mm	**TG815**

STEEL.65
Stainless steel tray.

Hight	Item
65 mm	**TG825**

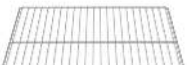

STEEL.GRID
Flat stainless steel grid

Hight	Item
65 mm	**GRP806**

SUPER.GRILL
Non-stick ribbed aluminium tray plus grill for grilling – QUICK.LOAD system.

Compatible with	Hight	Item
BIG & COUNTERTOP ovens	40 mm	**TG970**

CHEFTOP MIND.MAPS™ | BAKING ESSENTIAL

FORO.BLACK
Non-stick perforated aluminium tray.

Hight	Item
15 mm	**TG890**

FORO.SILICO
Silicon coated non-stick perforated aluminium tray.

Hight	Item
12 mm	**TG975**

CHEFTOP MIND.MAPS™ | TRAY HOLDER TROLLEYS

TRAY HOLDER TROLLEY
Multi-functional support for storing and transporting the trays.

Capacity	21 GN 1/1	**Dimensions - w x d x h**	450x608x1700 mm
Tray pitch	70 mm	**Weight**	15 kg
		Item	**XTB0002**

INVENTIVE SIMPLIFICATION

EUROPE

IT - ITALIA
UNOX S.p.a
E-mail: info@unox.it
Tel: +39 049 8657511

GB - UNITED KINGDOM
UNOX UK Ltd.
E-mail: info@unoxuk.com
Tel: +44 1252 851 522

CZ - ČESKÁ REPUBLIKA
UNOX DISTRIBUTION s.r.o.
E-mail: info.cz@unox.com
Tel: +420 241 940 000

BG - БЪЛГАРИЯ
UNOX BULGARIA
E-mail: info.bg@unox.com
Tel: +359 2 419 05 00

NL - NETHERLANDS
UNOX NETHERLANDS B.V.
E-mail: info.nl@unox.com
Tel: +31 6 27 21 14 10

DE - DEUTSCHLAND
UNOX DEUTSCHLAND GMBH
E-mail: info.de@unox.com
Tel: +49 2951 98760

IE - IRELAND
UNOX IRELAND
E-mail: info.ie@unox.com
Tel. +353 (0) 87 32 23 218

HR - HRVATSKA
UNOX CROATIA
E-mail: narudzbe@unox.com
Tel: +39 049 86 57 538

AT - ÖSTERREICH
UNOX ÖSTERREICH GMBH
E-mail: info.de@unox.com
Tel. +43 800 880 963

PL - POLSKA
Unox Polska Sp.zo.o.
E-mail: info.pl@unox.com
Tel: +48 665 232 000

FR - FRANCE, BELGIUM
& LUXEMBOURG
UNOX FRANCE s.a.s.
E-mail: info.fr@unox.com
Tel: +33 4 78 17 35 39

ES - ESPAÑA
UNOX PROFESIONAL
ESPAÑA S.L.
E-mail: info.es@unox.com
Tel: +34 900 82 89 43

TR - TÜRKİYE - UNOX TURKEY
Profesyonel mutfak ekipmanlari
endüstri ve ticaret limited şirketi
E-mail: info.tr@unox.com
Tel: +90 530 176 62 03

RU - РОССИЯ, ПРИБАЛТИКА
И СТРАНЫ СНГ
UNOX РОССИЯ
E-mail: info.ru@unox.com
Tel: +7 (499) 702 - 00 - 14

SC - SCANDINAVIAN
COUNTRIES
UNOX SCANDINAVIA AB
E-mail: info.se@unox.com
Tel: +46(0)790 75 63 64

PT - PORTUGAL
UNOX PORTUGAL
E-mail: info.pt@unox.com
Tel: +351 918 228 787

AMERICA

US - U.S.A. & CANADA
UNOX Inc.
E-mail: info.usa@unox.com
Tel: +1 800 489 8669

AR - ARGENTINA
UNOX ARGENTINA
E-mail: info.ar@unox.com
Tel: +54 911 37 58 43 46

CO - COLOMBIA
UNOX COLOMBIA
E-mail: info.co@unox.com
Tel: +57 350 65 88 204

BR - UNOX BRASIL
SERVICOS LTDA.
E-mail: info.br@unox.com
Tel: +55 11 98717-8201

MX - MEXICO
UNOX MEXICO,
S. DE R.L. DE C.V.
E-mail: info.mx@unox.com
Tel: +52 55 8116-7720

ASIA, OCEANIA & AFRICA

ZA - SOUTH AFRICA
UNOX SOUTH AFRICA
E-mail: info.sa@unox.com
Tel: +27 845 05 52 35

PH - PHILIPPINES
UNOX PHILIPPINES
E-mail: info.asia@unox.com
Tel: +63 9173108084

AU - AUSTRALIA
UNOX AUSTRALIA PTY Ltd.
E-mail: info@unoxaustralia.com.au
Tel: +61 3 9876 0803

UZ - UZBEKISTAN
UNOX PRO LLC
E-mail: info.uz@unox.com
Tel: +998 90 370 90 10

KR - 대한민국
UNOX KOREA CO. Ltd.
이메일: info.asia@unox.com
전화: +82 2 69410351

AC - OTHER
ASIAN COUNTRIES
UNOX (ASIA) SDN. BHD
E-mail: info.asia@unox.com
Tel: +603-58797700

TW - TAIWAN,
HONG KONG & MACAU
UNOX TAIWAN
E-mail: info.tw@unox.com
Tel: +886 928 250 536

MY - MALAYSIA
& SINGAPORE
UNOX (ASIA) SDN. BHD
E-mail: info.asia@unox.com
Tel: +603-58797700

CN - 中华人民共和国
UNOX TRADING (SHANGAI)
Ltd. CO.
电子邮件: info.asia@unox.com
电话: +603-58797700

NZ - NEW ZEALAND
UNOX NEW ZEALAND Ltd.
E-mail: info@unox.co.nz
Tel: +64 (0) 800 76 0803

AE - U.A.E.
UNOX MIDDLE EAST DMCC
E-mail: info.uae@unox.com
Tel: +971 4 554 2146

ID - INDONESIA
UNOX INDONESIA
E-mail: info.asia@unox.com
Tel: +62 81908852999

unox.com

LI2448B1

All images used are for illustrative purposes only.
All features indicated in this catalogue may be subject to change and could be updated without notice.